Practical Approaches & Tools for the Design of Steel Bridges – Part 1

Virtual Steel Bridge Forum – Mississippi
September 22, 2020

Michael A. Grubb, P.E.

M.A. Grubb & Associates, LLC

Wexford, PA

mgrubb@zoominternet.net (724) 799-8286

M.A. Grubb & Associates, LLC

Topics on Steel Girder Design

SPAN ARRANGEMENT CONSIDERATIONS

Structural Unit Lengths

- Single multi-span unit preferred over many simple spans or several continuous-span units
- Eliminating simple spans and deck joints provides savings in:
  - Bearings
  - Cross-frames
  - Expansion devices

Balanced Spans

- End spans ideally 75% - 80% of center span

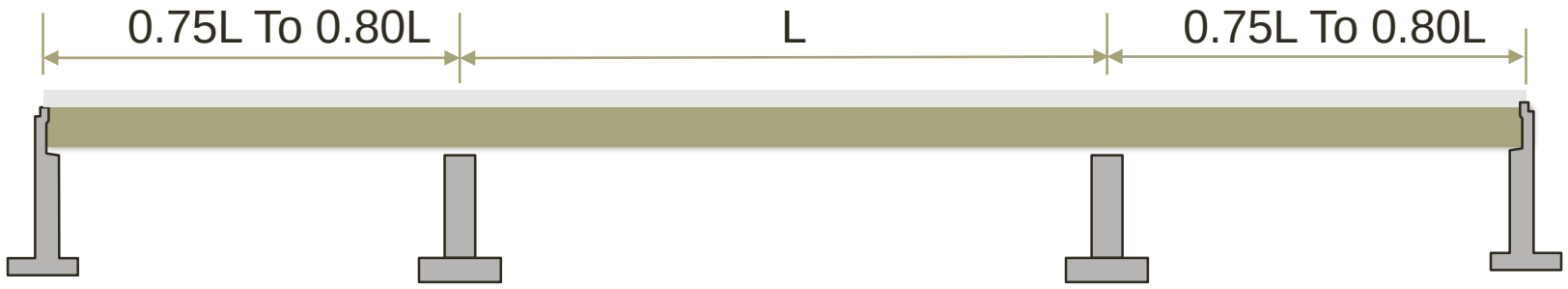

Balanced Span Arrangement

- Yields approximately equal maximum positive moments in the end and interior spans

Balanced Spans

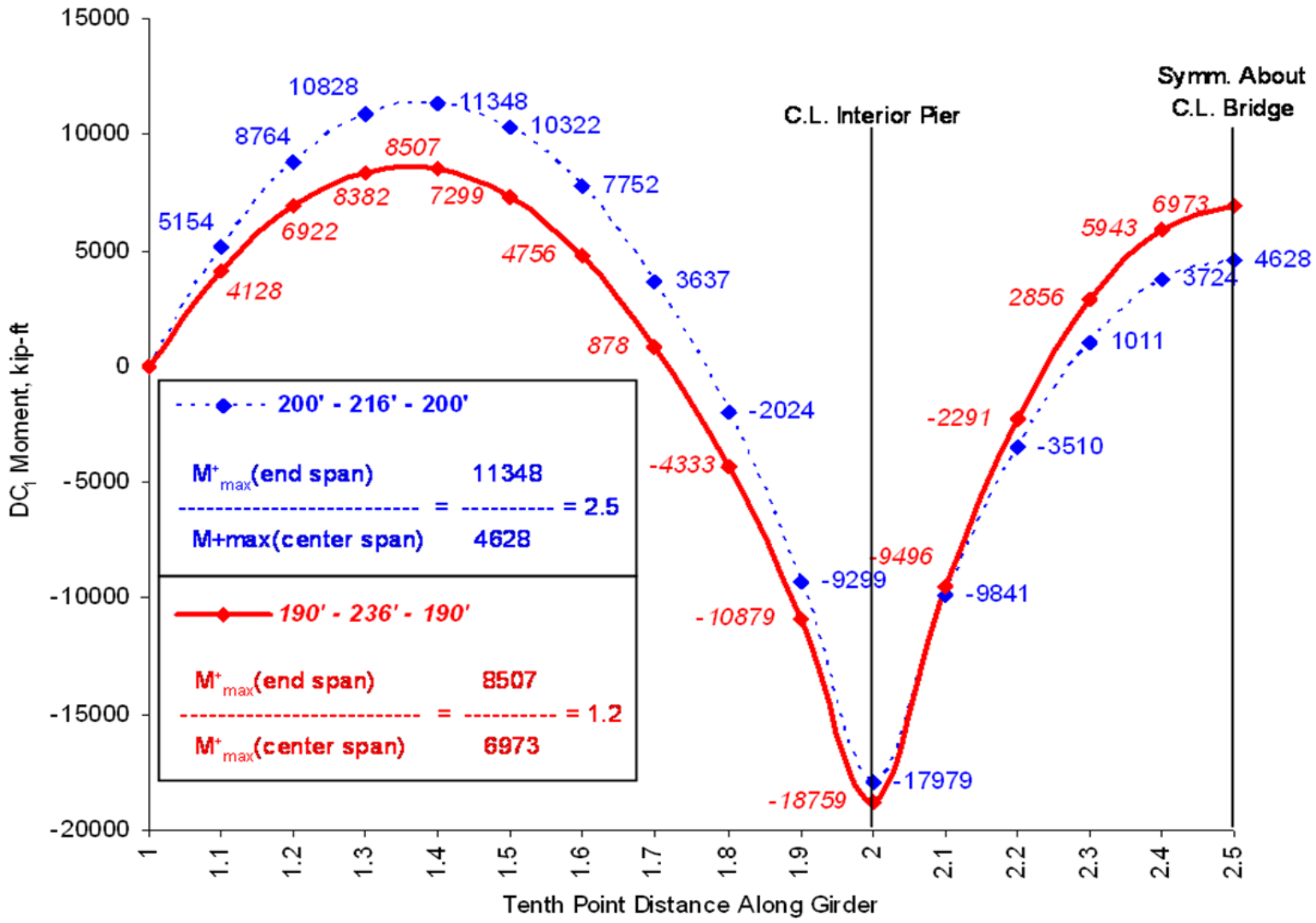

Span Optimization

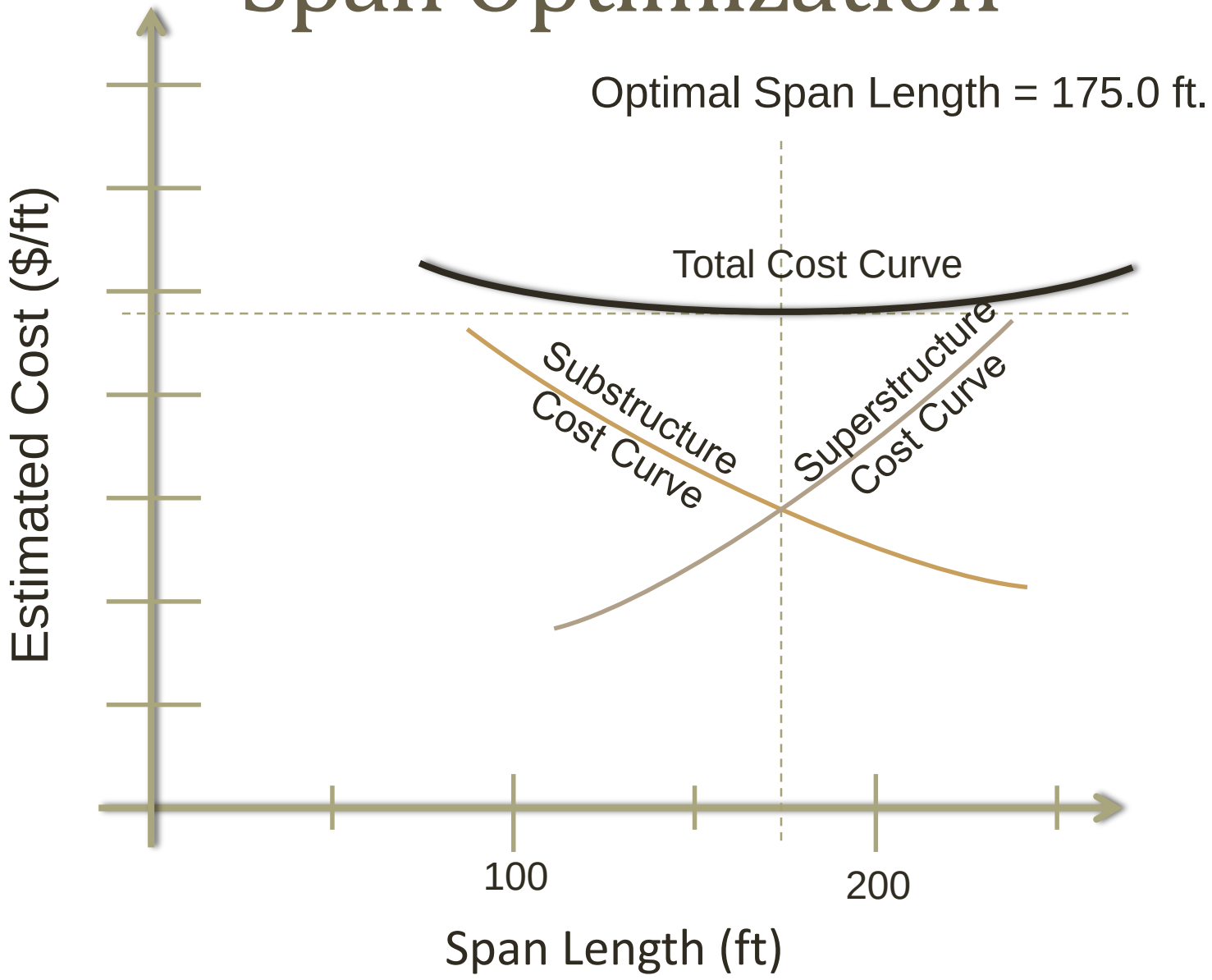

Topics on Steel Girder Design

CROSS-SECTION LAYOUT CONSIDERATIONS

Girder Spacing

Benefits of minimizing number of girder lines:

- Fewer girders to fabricate, inspect, coat, ship and erect
- Fewer bearings to purchase, install and maintain
- Fewer bolts and welded flange splices
- Reduced fabrication and erection time
- Stiffer structure with smaller relative girder deflections
- Reduced out-of-plane rotations

Girder Spacing
Future Redecking Under Traffic

- **Issues to consider:**
  - Girder capacity
  - Stability
  - Uplift
  - Cross-frame forces

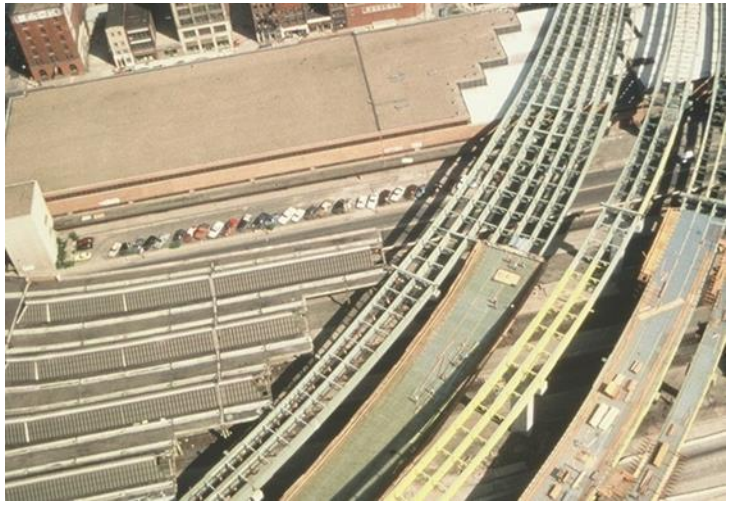

- Skewed and horizontally curved girder bridges can be particularly problematic during redecking

Deck Overhangs

- Goal – economical cross-section
  - Balance spacing & overhang so that interior/exterior girders are nearly the same size

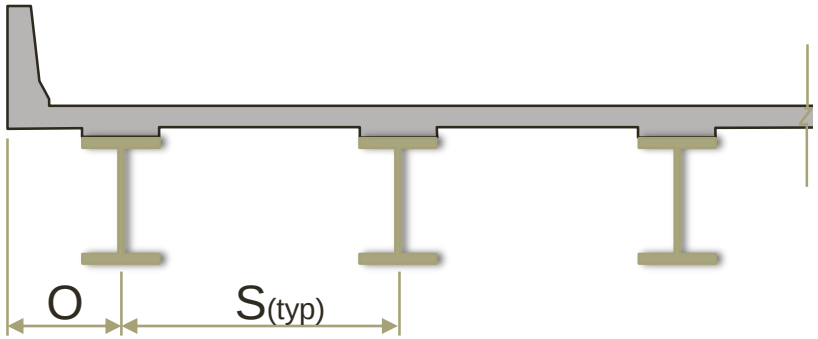

Deck Overhangs
Dead Load Distribution

- For the cases shown, distribute the noncomposite DC_1 loads equally to each girder (vs. tributary area)

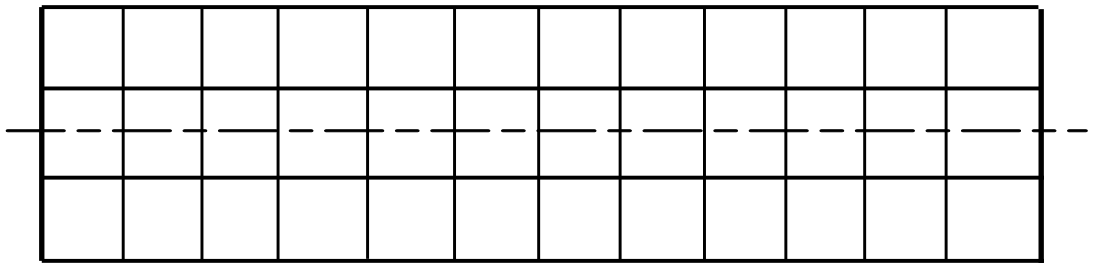

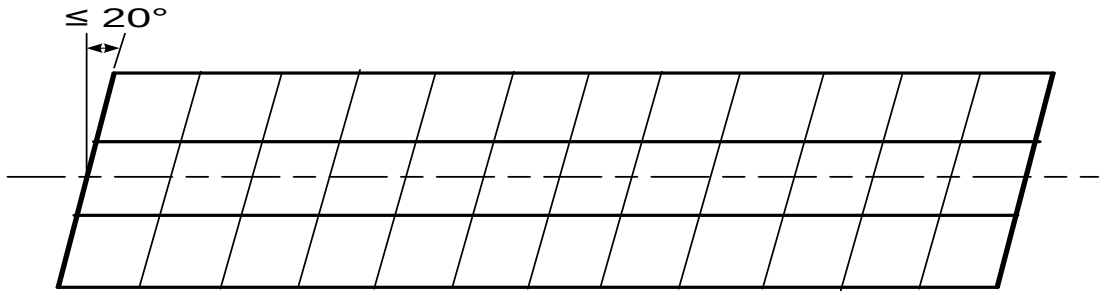

Deck Overhangs
Dead Load Distribution

- Assign a larger percentage of the composite DC_2 loads to the exterior girders & the adjacent interior girders

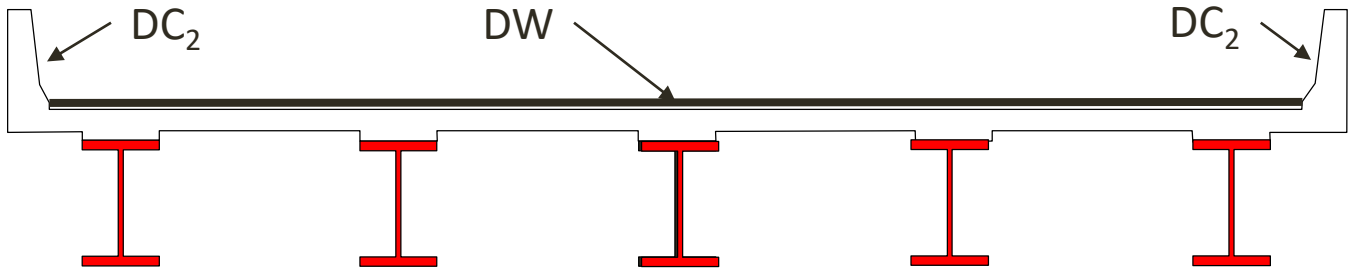

- Distribute wearing surface load DW equally to all the girders

Deck Overhangs
Live Load Distribution

- Apply special cross-section analysis to determine the live load distribution to the exterior girders
  - Assumes the entire cross-section rotates as a rigid body about the longitudinal centerline of the bridge:

$$R = \frac{N_L}{N_b} + \frac{X_{ext} \sum^{N_L} e}{\sum^{N_b} x^2}$$

Eq. (C4.6.2.2.2d-1)

Deck Overhangs

- Total factored moment tends to be larger in exterior girders (also subject to overhang loads)
- Limit size of deck overhangs accordingly

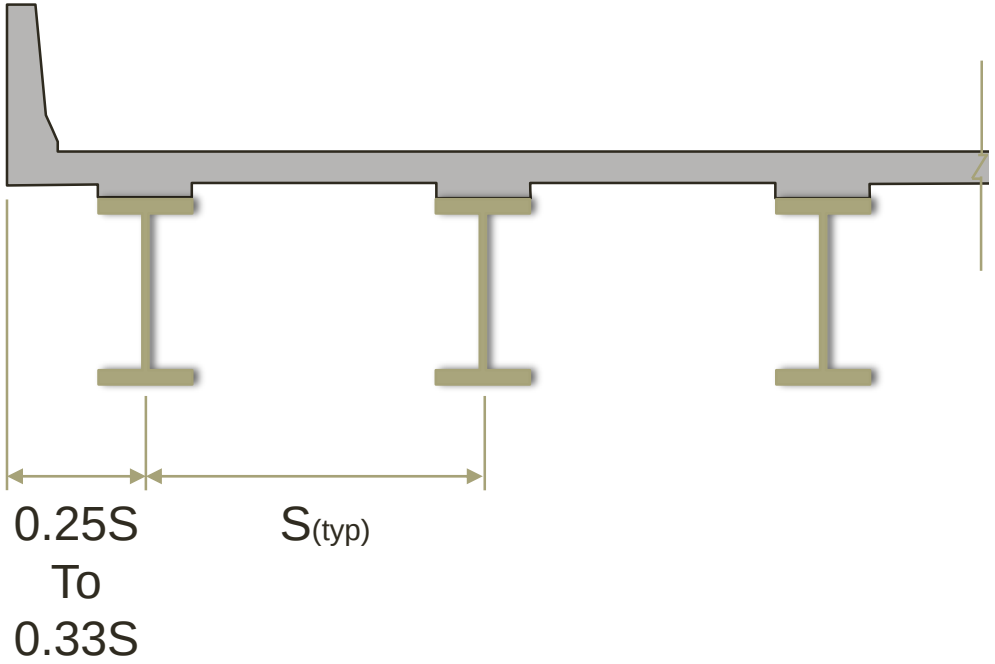

Topics on Steel Girder Design

FRAMING-PLAN LAYOUT CONSIDERATIONS

Field-Section Size

- Field sections are girder sections fabricated and shipped to the bridge site
- Handling and shipping requirements affect the field section lengths selected for design

Field-Section Size
I-Girders

- Shipment by truck is the most common means
  - 175 ft. Possible, 80 ft. Comfortable
  - 100 Tons Maximum, 40 Tons No Permit
  - 16 ft. Width Maximum
  - 10 ft. Height

Field-Section Size

L/b Ratio

- **L/b Ratio (Art. C6.10.2.2):**

$$b_{tfs} \geq \frac{L_{fs}}{85}$$

b_{tfs} = smallest top flange width within the unspliced girder field section (in.)

L_{fs} = length of unspliced girder field section (in.)

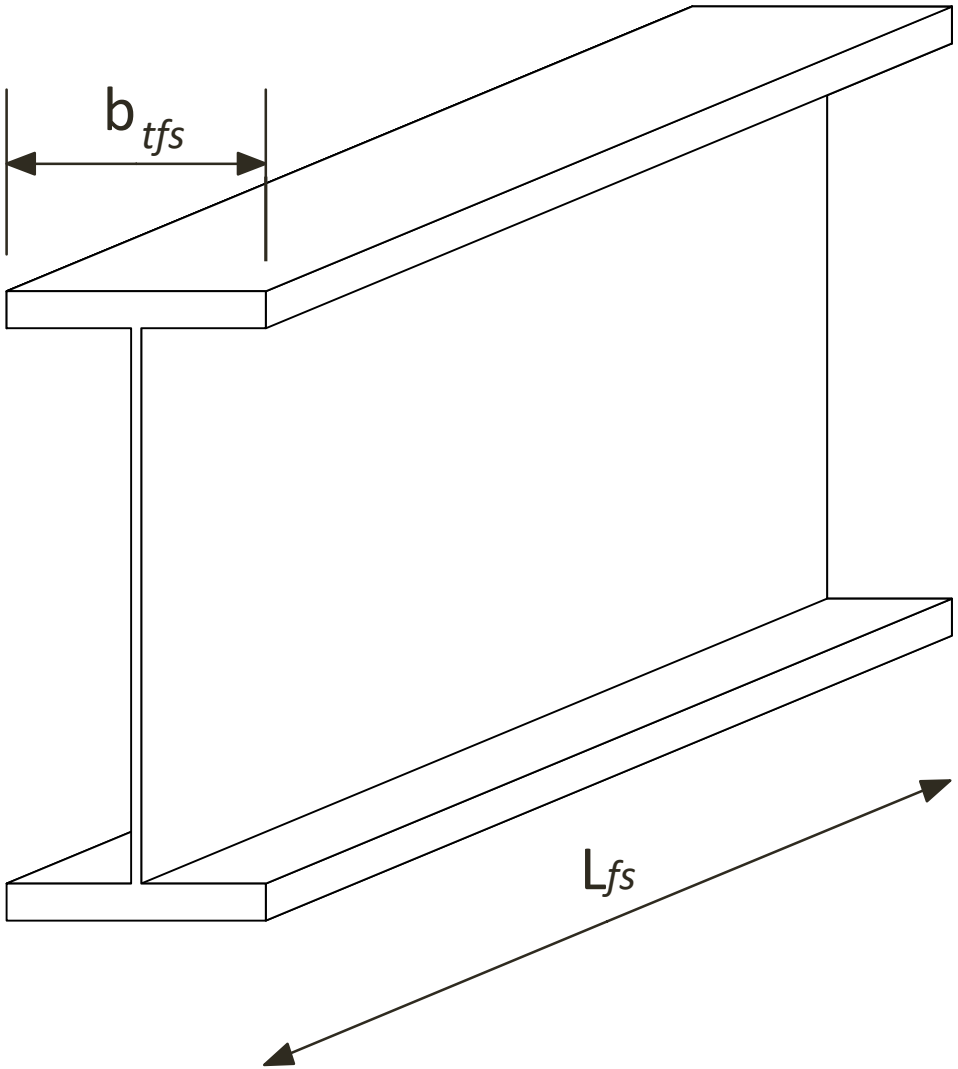

Cross-Frame & Diaphragm Spacing Requirements

Based on rational analysis

- Nearly uniform spacing desirable
- Satisfy flange resistance requirements

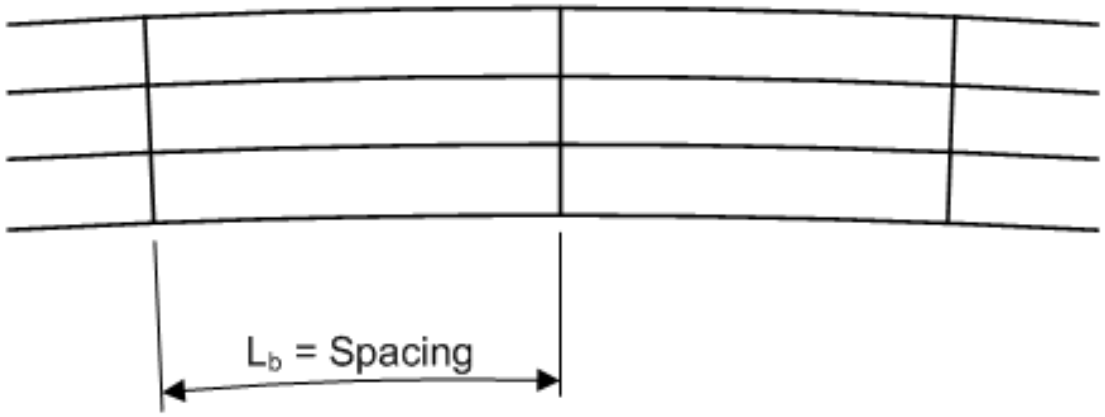

Cross-Frame Spacing Trade-Offs

- Closer spacing
  - Lower cross-frame forces
  - Lower lateral flange moments
  - Higher compression-flange capacity

    vs.
  - Higher cross-frame cost
- Larger spacing
  - Lower cross-frame cost

    vs.
  - Larger cross-frame forces
  - Larger lateral flange moments
  - Lower compression-flange capacity

Preliminary Cross-Frame Spacing

Simple Spans & Positive Moment Regions in End Spans	18 to 25 ft
Positive Moment Regions in Interior Spans	24 to 30 ft
Negative Moment Regions	18 to 24 ft

Skew Effects
Framing Arrangements - Layout

- Skews ≤ 20 degrees, may be placed parallel to supports

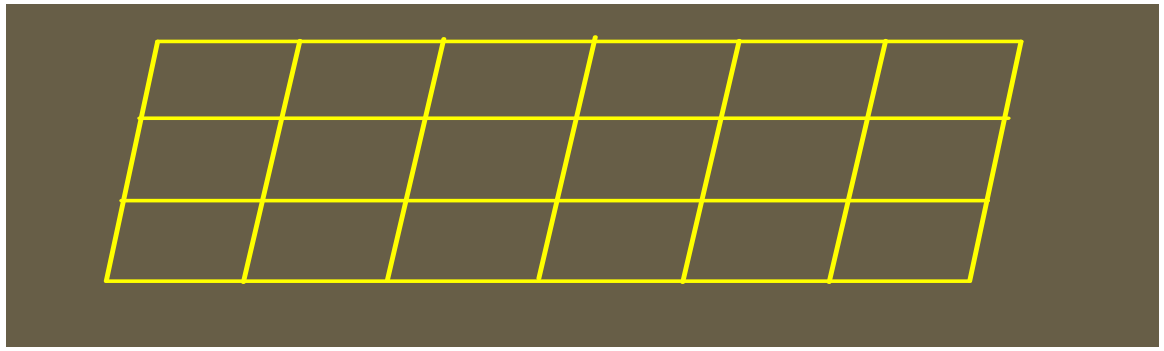

- Skews > 20 degrees, must be placed perpendicular to girders and may be placed in contiguous or discontinuous lines

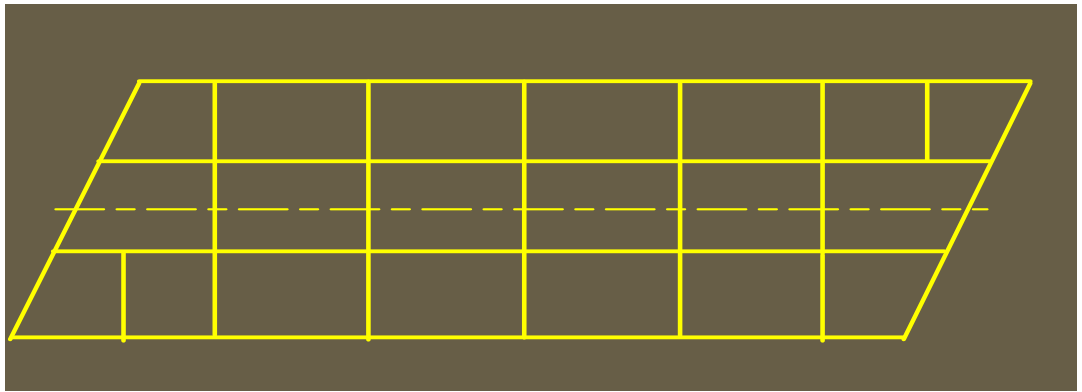

Skew Effects
Framing Arrangements - Layout

- Recommended minimum offset of cross-frames adjacent to skewed supports (discontinuous cross-frames)

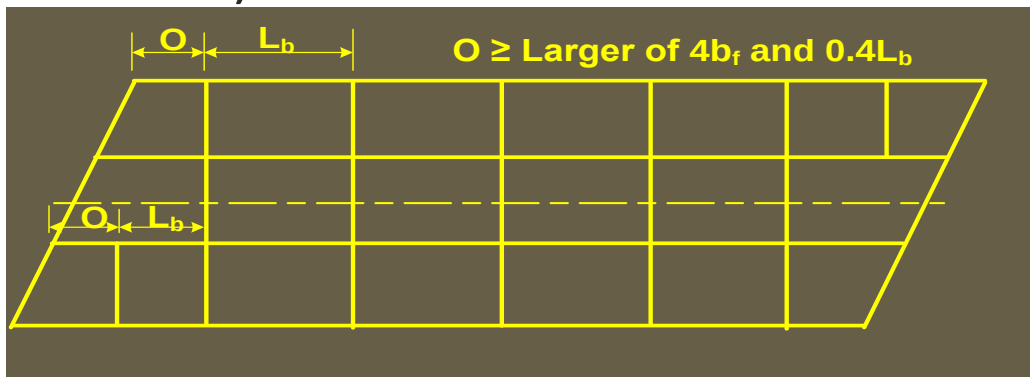

- For skews > 20 degrees, it may be advantageous to stagger the cross-frames (discontinuous cross-frames)

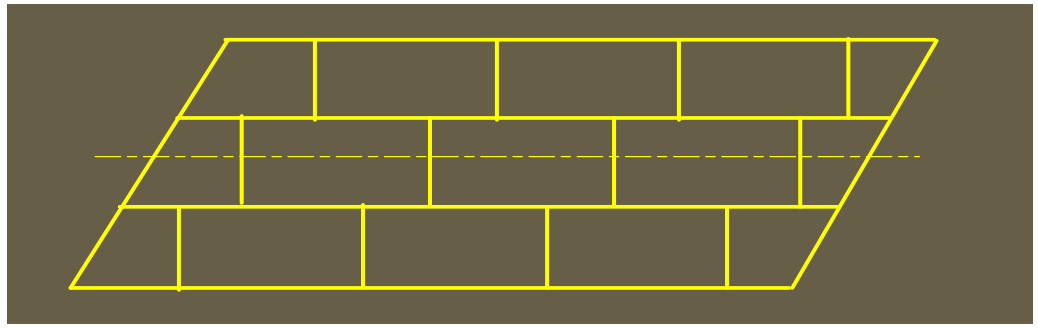

Skew Effects
Framing Arrangements - Layout

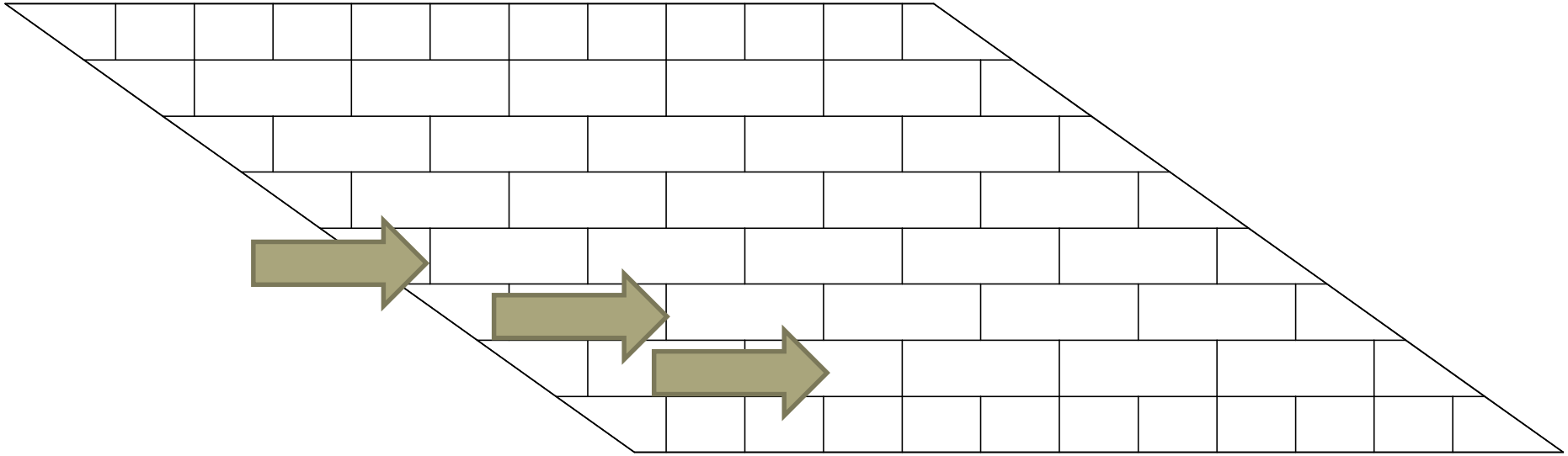

- Cross-frames adjacent to the bearing lines are placed at the same offset distance relative to the bearing lines.
- Other intermediate cross-frames placed at constant spacing.
- Every other cross-frame intentionally omitted within the bays between the interior girders.

Skew Effects
Framing Arrangements - Layout

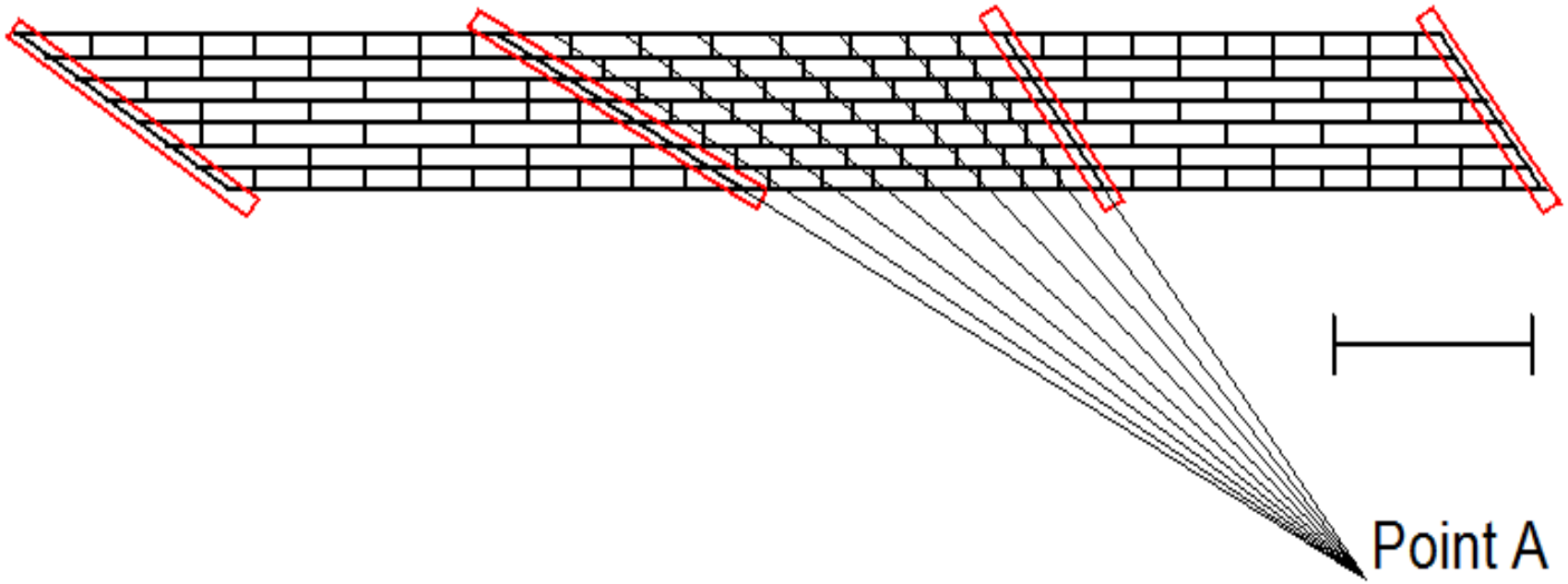

- Cross-frames in center span arranged in “fanned” pattern from one bearing to the next.
- Lines through work points at mid-length of center span cross-frames pass through Point A.

Skew Effects
Framing Arrangements - Layout

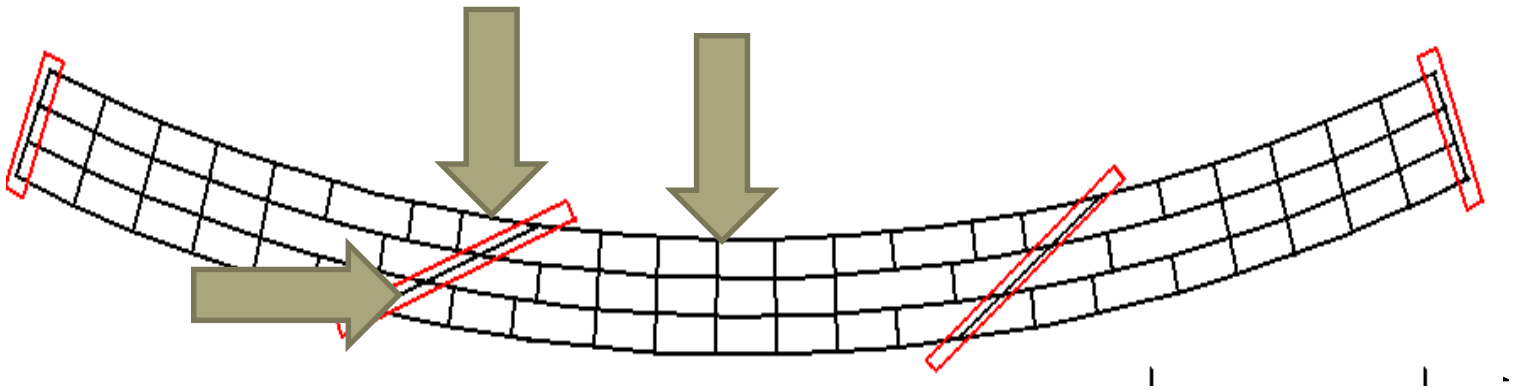

- Framing of a normal intermediate cross-frame into or near a bearing location along a skewed support line is strongly discouraged unless the cross-frame diagonals are omitted.
- At skewed interior piers & abutments, place cross-frames along the skewed bearing line, and locate intermediate cross-frames greater than or equal to the recommended minimum offset from the bearing lines.
- For curved I-girder bridges, provide contiguous intermediate cross-frame lines within the span in combination with the recommended offset at skewed bearing lines.

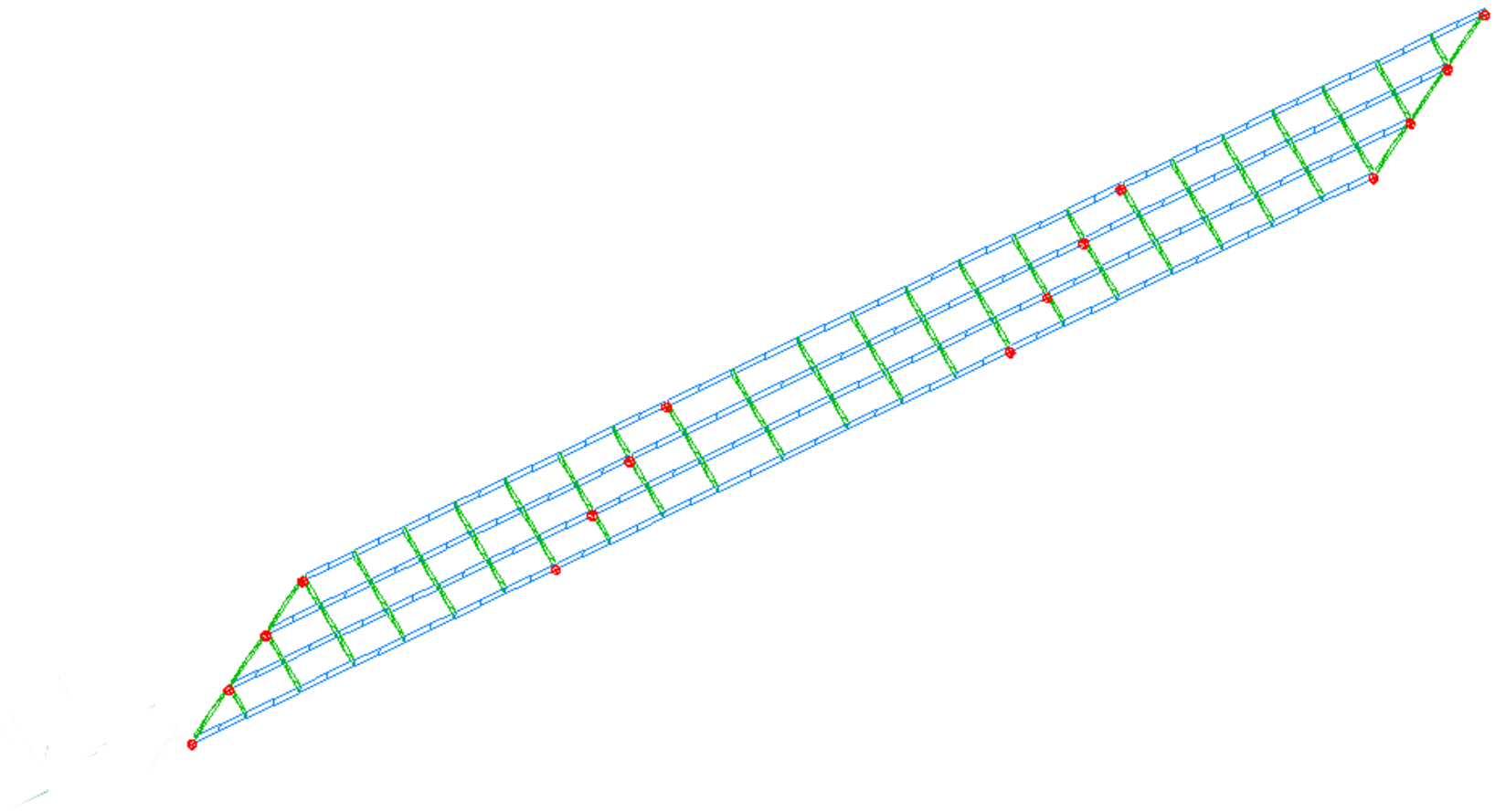

Skewed Example Bridge
Dead Load (DC_1) Deflections

DC_1 (unfactored) in.	*Spans 1&3* Right Bridge Line Girder Analysis	*Spans 1&3* Right Bridge 3D Analysis	*Span 1* Skewed Bridge 3D Analysis	*Span 2* Skewed Bridge 3D Analysis	*Span 3* Skewed Bridge 3D Analysis
G1	-3.15	-3.11	-4.18	-3.67	-2.56
G2	-3.15	-3.16	-3.12	-3.40	-2.57
G3	-3.15	-3.16	-2.57	-3.40	-3.12
G4	-3.15	-3.11	-2.56	-3.67	-4.18

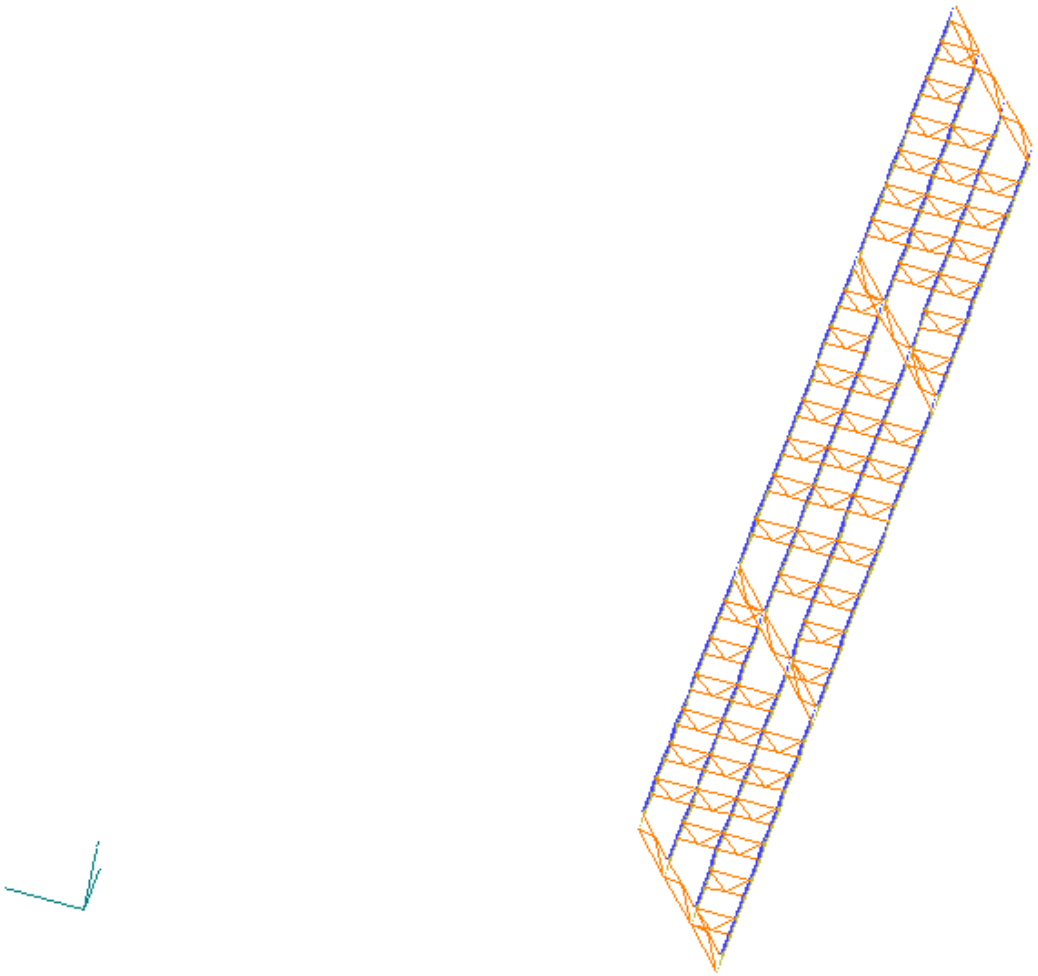

Dead Load (DC_1) Deflections Discontinuous Cross-Frames

DC_1 (unfactored) in.	*Spans 1&3* Right Bridge Line Girder Analysis	*Spans 1&3* Right Bridge 3D Analysis	*Span 1* Skewed Bridge 3D Analysis	*Span 2* Skewed Bridge 3D Analysis	*Span 3* Skewed Bridge 3D Analysis
G1	-3.15	-3.11	-3.68	-2.82	-3.01
G2	-3.15	-3.16	-2.81	-2.46	-2.61
G3	-3.15	-3.16	-2.61	-2.46	-2.81
G4	-3.15	-3.11	-3.01	-2.82	-3.68

Topics on Steel Girder Design

I-GIRDER PROPORTIONING CONSIDERATIONS

I-Girder Web Proportioning

Optimum Web Depth

- **Optimum Web Depth**
  - Not always possible to achieve optimum depth due to clearance issues or unbalanced spans
  - Provides minimum cost girder in absence of depth restrictions
  - Function of many factors – elusive for composite girders
  - May be established based on series of designs with different web depths to arrive at an optimum depth based on weight and/or cost factors

I-Girder Web Proportioning

Span-to-Depth Ratio

- Span-to-Depth Ratio (Art. 2.5.2.6.3)

Simple Spans	0.040L
Continuous spans	0.032L

Suggested Minimum Overall Depth for Composite I-beam

Simple Spans	0.033L
Continuous spans	0.027L

Suggested Minimum Depth for I-beam

LRFD SIMON

SOFTWARE SOLUTION FOR PRELIMINARY BRIDGE DESIGN

- Steel Girder Analysis AND Preliminary Design Program
- I-Girders AND Box Girders

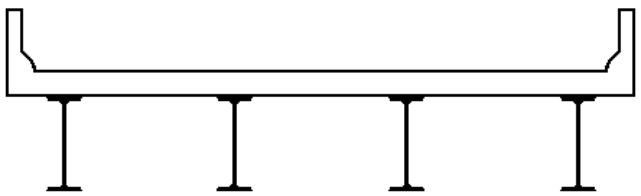

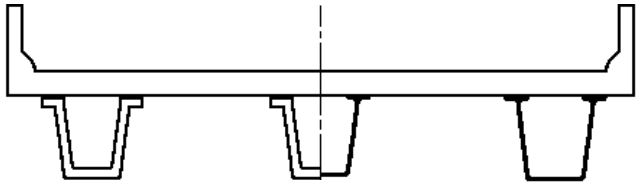

www.steelbridges.org → Design and Estimating

→ Design Resources and Software

What Does LRFD SIMON Do?

- Line girder analysis of steel beams
  - Based on user-defined or program-defined live load distribution factors
- Iterative design
- Complete AASHTO LRFD code checking (8th Edition)
- Cost analysis based on user-input cost factors
- Customizable processes and output

LRFD SIMON Capabilities

- Simple span or up to 12 continuous spans
- 20 nodes per span
- 1/10th point influence lines
- Partial or full-length dead loads
- AASHTO or user-defined live loads
- Transversely stiffened webs with or without longitudinal stiffeners or unstiffened webs
- Bearing stiffeners
- Parabolic or linear web haunches
- Homogenous or hybrid cross-sections

LRFD SIMON – Optimization Approach

- Automatic incremental design changes to achieve convergence
- Alternatively, can run program for one design cycle for evaluation & make design changes manually
- User must still control what options are explored
  - Web depth? Stiffened?
  - Flange size ranges
  - Material grade(s)
- Successful run does not necessarily mean a good design
- “Best” solution still depends on the Engineer

I-Girder Web Proportioning

Web Depth Optimization – LRFD SIMON

DEPTH VARIATION ANALYSIS

==========

Filename	Depth Inch	Weight Tons	Cost $
SIMONTUTORIAL_BELOW3	61.00	245.67	513546
SIMONTUTORIAL_BELOW2	63.00	242.74	508186
SIMONTUTORIAL_BELOW1	65.00	243.00	509408
SIMONTUTORIAL	67.00	239.88	502815
SIMONTUTORIAL_ABOVE1	69.00	240.66	504648
SIMONTUTORIAL_ABOVE2	71.00	242.04	507768
SIMONTUTORIAL_ABOVE3	73.00	248.12	518250

I-Girder Web Proportioning

Web Thickness

- Web Thickness (Art. 6.10.2.1)

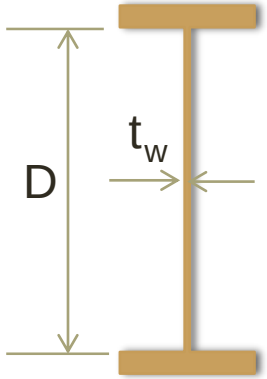

Without Longitudinal Stiffeners	$\frac{D}{t_w} \leq 150$
With Longitudinal Stiffeners	$\frac{D}{t_w} \leq 300$

- ½" minimum thickness preferred by fabricators

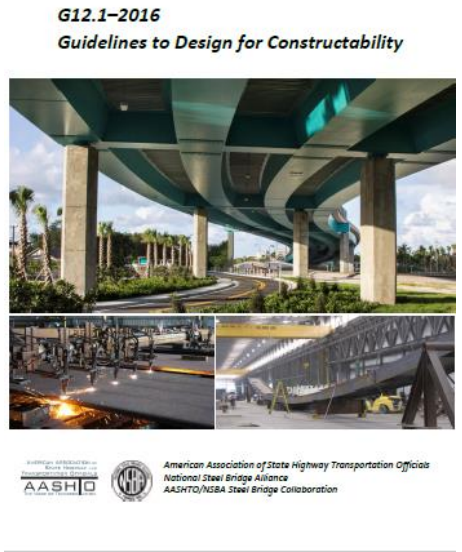

I-Girder Flange Proportioning

- Proportioning Requirements (Art. 6.10.2.2):

$$\frac{b_f}{2t_f} \leq 12$$

$$b_f \geq \frac{D}{6}$$

$$t_f \geq 1.1\, t_w$$

$$0.1 \leq \frac{I_{yc}}{I_{yt}} \leq 10$$

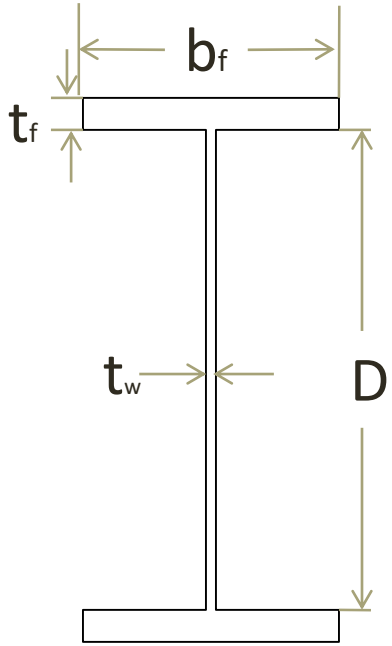

$$b_{tfs} \geq \frac{L_{fs}}{85}$$

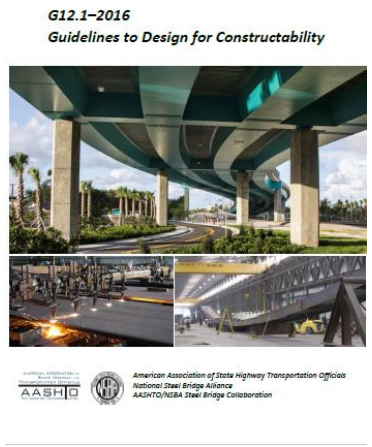

Fabricators prefer: $b_f \geq 12$ in.; $t_f \geq 0.75$ in.

I-Girder Flange Proportioning

Deck Overhang Loads

- Deck Overhang Loads:
  - Significant effects on exterior girders
  - Amplified top flange lateral bending stresses may be 10 to 15 ksi

$$f_{bu} + f_{\ell} \leq \phi_f R_h F_{yc}$$

$$f_{bu} + \frac{1}{3} f_{\ell} \leq \phi_f F_{nc}$$

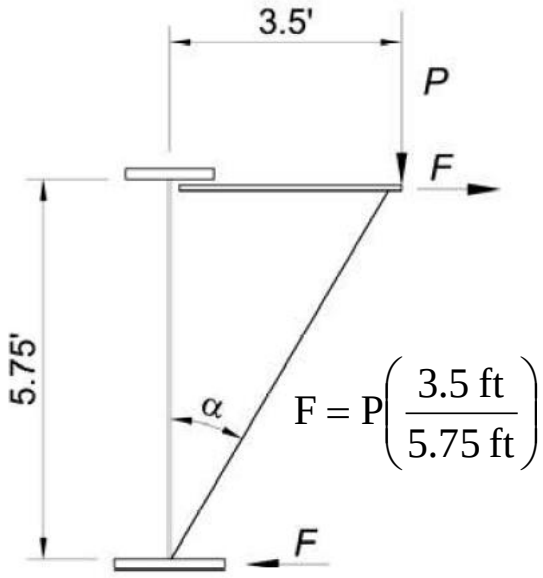

$$F = P\left(\frac{3.5\text{ ft}}{5.75\text{ ft}}\right)$$

$$M_{\ell} = \frac{FL_b^2}{12}$$

$$f_{\ell} = \frac{M_{\ell}}{\left(t_f b_f^2/6\right)}$$

I-Girder Flange Proportioning

Sizing Flanges for Efficient Fabrication

- Minimum plate size from mill is 60”
- Most economical plate size from mill is 72" to 96"
- Consider sizing flanges so that as many pieces as possible can be obtained from a wide plate of a given grade and thickness with minimal waste
- Limit the number of different flange plate thicknesses specified for a given project

I-Girder Flange Proportioning

Sizing Flanges for Efficient Fabrication

- Weld shop splices after cutting individual flanges from a single plate

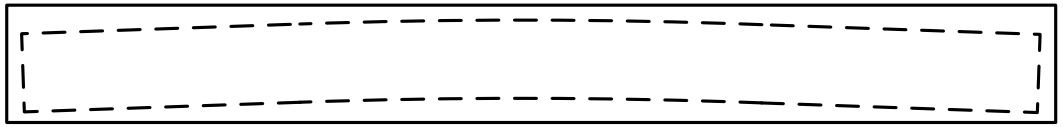

- Cut multiple flange plates from slab welded plates

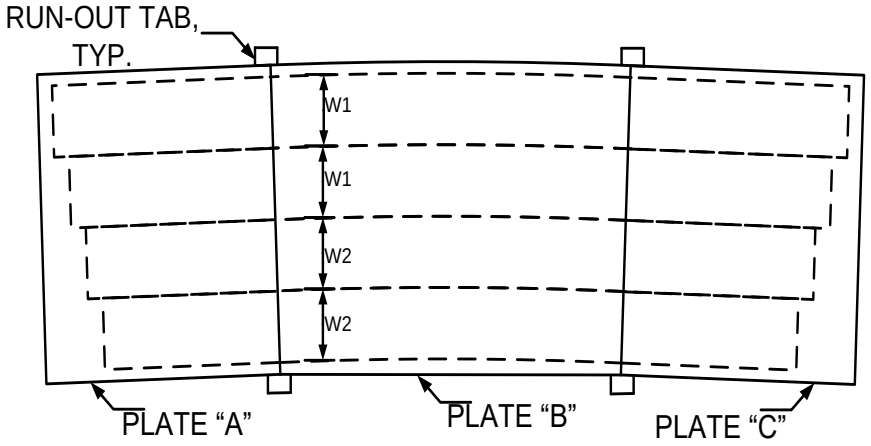

I-Girder Flange Proportioning

Flange Thickness Transitions

- Affected by plate length availability and economics of welding and inspecting a splice vs. extending a thicker plate
  - Optimal ordered plate lengths usually ≤ 80 feet
  - A welded I-girder flange splice is equivalent to 800 to 1,200 lbs of steel plate
- Three or fewer flange thicknesses per flange (or two shop splices) should be used in a typical field section
- Reduce flange area by no more than one-half the area of the thicker plate at shop splice

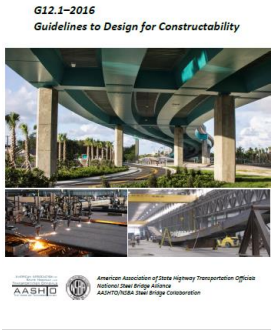

?? QUESTIONS ??


Photo: 2020 Prize Bridge National Winner – Manning Crevice (Idaho) – Photo Credit: Ken Saindon

Basics of Bolted Field Splice Design

Christopher Garrell, PE
National Steel Bridge Alliance

Smarter. Stronger. Steel.

1


Photo: Eads Bridge Over the Mississippi River, St. Louis, Missouri

Basics of Bolted Field Splice Design

LRFD Specification - Comparison

Smarter. Stronger. Steel.

3

LRFD Specification - Comparison

Shear Resistance – AASHTO 6.13.2.7

- Initial Length Reduction
  - Changed from 0.8 to 0.9.
  - Long Joint from 50 to 38 in.
- Bolts with threads excluded from the shear plane:
  - $\mathbf{R_n = 0.56\ A_b F_{ub} N_s}$ (old value 0.48).
- Bolts with threads in the shear plane: (web bolts)
  - $\mathbf{R_n = 0.45\ A_b F_{ub} N_s}$ (old value 0.38).
- Nominal shear resistance in lap tension connections longer than 38 in. taken as 0.83 times the values above.

4

LRFD Specification - Comparison

Slip Resistance – AASHTO 6.13.2.8

Class	Typical Surface	7th Edition	8th Edition
A	Mill Scale	0.33	0.30
B	Zinc Rich Paint, Metalized* and Blasted	0.50	0.50
C	Galvanized**	0.33	0.30
D	Organic Zinc Rich	-	0.45

* Unsealed metalized zinc or 85/15 zinc aluminum ($t_{coating} \leq 16$ mils). Sealed metalized coatings are not included – must be qualified by test.
** Do not wire brush the surface.

5

LRFD Specification - Comparison

Hole Size – AASHTO 6.13.2.4.2

- Maximum hole size in Table 6.13.2.4.2-1 for bolts greater than or equal to 1” in diameter is increased to the nominal diameter of the bolt plus 1/8”.
- Eliminates need to field ream holes to fit large-diameter hot forged bolts.

6

LRFD Specification - Comparison

- Removed 75 percent and average rules in AASHTO LRFD Article 6.13.1.
- Develop the full flange capacity.
  - Is it enough to carry factored moment?
  - If so… you are done.
- Develop the full shear capacity of the web.
  - Assign the balance of the moment to the web force.

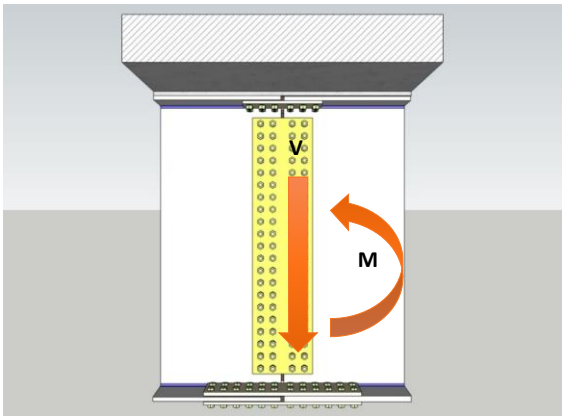

7

Basics of Bolted Field Splice Design

LRFD Specification - Overview

Smarter. Stronger. Steel.

8

Design Procedure - Overview

Flange Splice Plate Sizing - Width

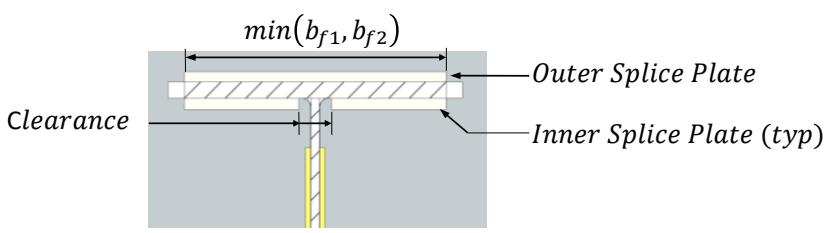

Girder Section at Splice

Outer Width: $b_{outer} = min(b_{f1}, b_{f2})$

Clearance: $clearance \geq max(t_{w1}, t_{w2}) + 2\left[weld\ size + \boxed{\frac{1}{8}}\right]$

Inner Width: $b_{inner} = \frac{b_f - clearance}{2}$

9

Design Procedure - Overview

Flange Splice Plate Sizing - Thickness

Thickness: $t_{splice} \geq \left(\frac{t_f}{2}\right) + \frac{1}{16}$

10% Rule: $0.90 b_{outer} t_{outer} \leq 2 b_{inner} t_{inner} \leq 1.1 b_{outer}\ t_{outer}$

$$b_{inner} = \frac{b_f - clearance}{2}$$

$$0.90 t_{outer} \leq \left[1 - \frac{clearance}{b_f}\right] t_{inner} \leq 1.1 t_{outer}$$

$\therefore Solve\ for\ \ t_{inner}$

10

Design Procedure - Overview

Flange Splice Plate Sizing – Filler

- Typical where adjoining plates at the point of splice are different.
- Thickness is difference in thickness of adjoining flange or web plates.
- Reduction factor is applied to bolt shear resistance if filler is ¼” or greater.

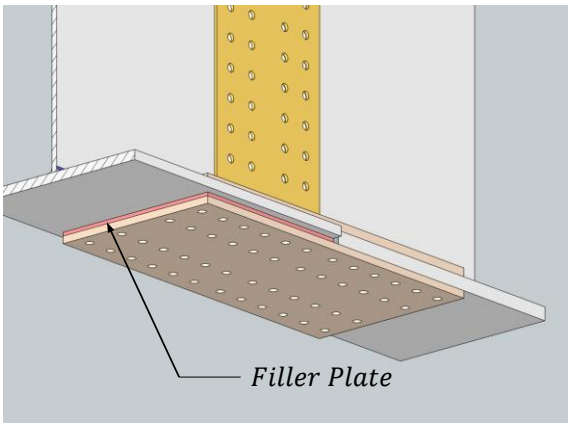

11

Design Procedure - Overview

Web Splice Plate Sizing

- Symmetrically with plates on each side of web
- Splice plates must extend nearly the full web depth
- No filler plates needed if difference in web thickness is less than 1/16 inch.
- See AASHTO 6.13.6.1.3c

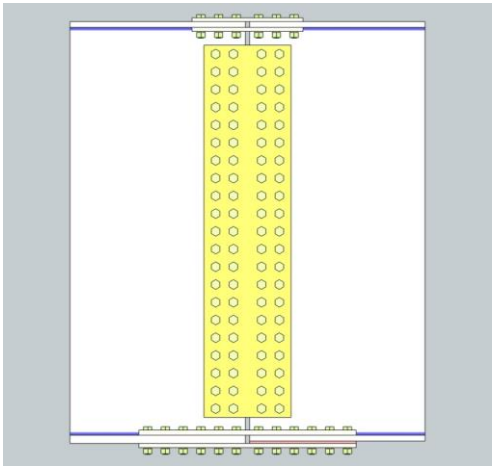

12

Design Procedure - Overview

- Design Flange Connection to Develop the Smallest Design Yield Resistance of the Connected Flanges.

Design Yield Resistance: $P_{fy} = F_{yf} A_e$ 6.13.6.1.3b-1

Effective Flange Area: $A_e = \left(\frac{\phi_u F_u}{\phi_y F_{yf}}\right) A_n \leq A_g$ 6.13.6.1.3b-2

Where: ϕ_u= 0.80 resistance factor for fracture of tension members.
ϕ_y= 0.95 resistance factor for yielding of tension members.
A_n = net area of the flange.
A_g = gross area of the flange.
F_{yf} = yield strength of the flange (Table 6.4.1-1).
F_u = tensile strength of the flange (Table 6.4.1-1).

13

Design Procedure - Overview

Positive Flange Moment Capacity Check

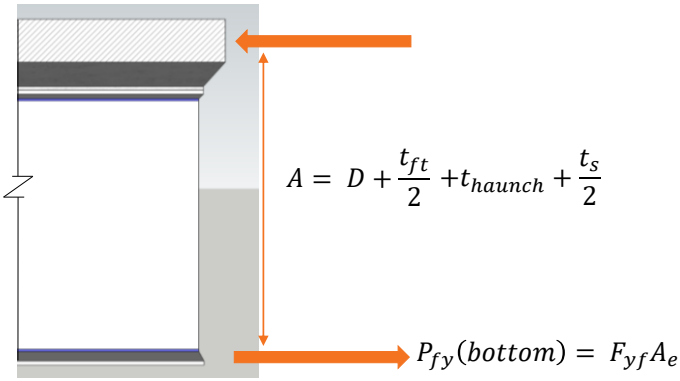

Moment Resistance:
P_{fy} for the Bottom Flange x Moment Arm to Mid - Depth of Deck
= (F_{yf} x A_e) x A

14

Design Procedure - Overview

Negative Flange Moment Capacity Check

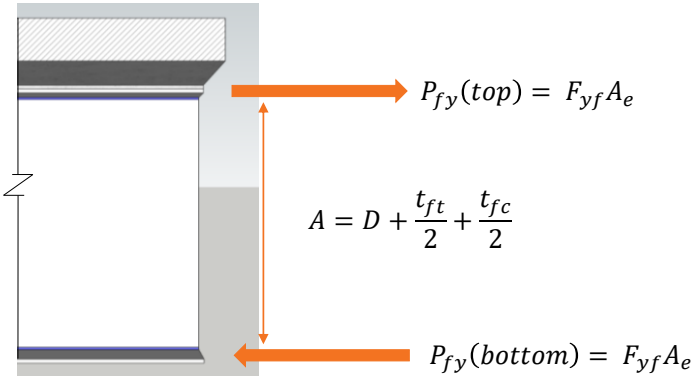

Moment Resistance:
Smallest Value of P_{fy} x Distance Between Flange Centroids
= (F_{yf} x A_e) x A

15

Design Procedure - Overview

Flange Splice Bolts

Minimum Number of Bolts: $N_{min} = \frac{P_{fy}}{R_r R}$

Where: P_{fy} = Design yield resistance of the flange.
R_r = Factored shear resistance of the bolts.
R = Reduction factor due to the presence of any filler plates.

Nominal Shear Resistance (Excluded): $R_n = 0.56 A_b F_{ub} N_S$ 6.13.2.7-1

Factored Shear Resistance: $R_r = \phi_s R_n$

Where: A_b = Area of the bolt corresponding to the nominal diameter.
F_{ub} = Minimum tensile strength of the bolt specified (6.4.3.1.1).
N_s = Number of shear planes per bolt (Ns = 2).
ϕ_s = Resistance factor for shear of bolt (0.80).

16

Design Procedure - Overview

- Design Web Connection to Develop the Smallest Factored Shear Resistance of the Connected Web.

Factored Shear Resistance of Web: $V_r = \phi_v V_n$

Where: ϕ_v= Resistance factor for shear (1.0).
V_n = Nominal shear resistance of the web (6.10.9 or 6.11.9).

17

Design Procedure - Overview

- If Moment From Flanges is Not Sufficient to Resist Factored Design Moment, Calculate Additional Moment to be Provided by the Web.
- Web Design Force = Vector sum of smallest factored shear and horizontal force.

$$R = \sqrt{(V_r)^2 + (H_w)^2} = \sqrt{(\phi_v V_n)^2 + (H_w)^2}$$

Where: V_r = Smaller factored shear resistance.
H_w = Horizontal force in the web

18

Design Procedure - Overview

Horizontal Web Force

- Composite Section in Positive Bending

Horizontal Force (H_w)

$$H_w = \frac{Web\ Moment}{A_w}$$

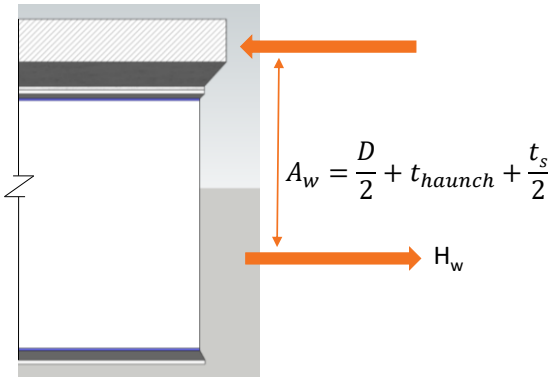

19

Design Procedure - Overview

Horizontal Web Force

- Composite Section in Negative Bending
- Non-Composite Section

Horizontal Force (H_w)

$$H_w = \frac{Web\ Moment}{D/4}$$

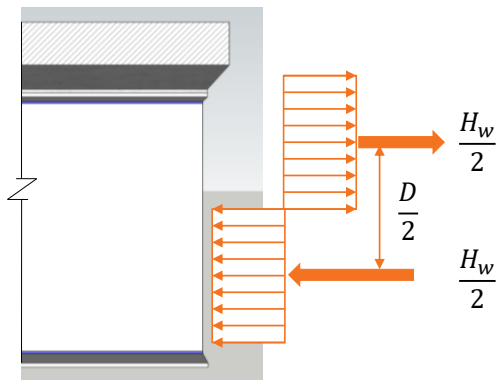

20

Design Procedure - Overview

Web Splice Bolts

Minimum Number of Bolts: $N_{min} = \frac{Web\ Design\ Force}{R_r}$

Nominal Shear Resistance (Included): $R_n = 0.45 A_b F_{ub} N_S$ 6.13.2.7-1

Factored Shear Resistance: $R_r = \phi_s R_n$

Where: $Web\ Design\ Force$ = V_r or R.
R_r = Factored shear resistance of the bolts.
ϕ_s = Resistance factor for shear of bolt (0.80).

21

Design Procedure - Overview

Anticipated Effect

- Slight increase in flange splice bolts.
- Significant decrease in web splice bolts.
- Overall simplification in the design procedure.
- Easier interpretation of the provisions.
- Faster and more efficient design of field splices
- More consistent and cost-effective designs.

22

Design Procedure - Overview

	7th Edition	8th Edition
Top Flange	24	20
Web	102	70
Bottom Flange	28	28
Total – Per Side	154	118

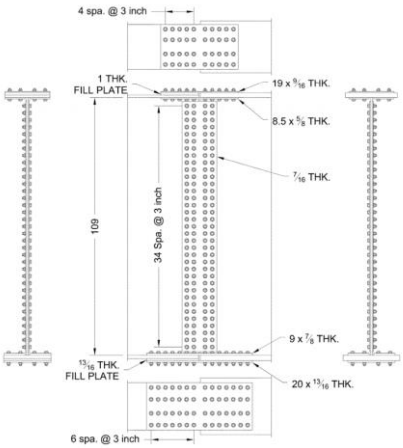

Bolts Saved: 72x$20= $1,440
Labor Saved: 72x10 min= 12 field hours each splice

23

Basics of Bolted Field Splice Design

Case Study Bridge - Background

Smarter. Stronger. Steel.

24

Bolted Field Splice – Case Study Bridge

Five Field Sections

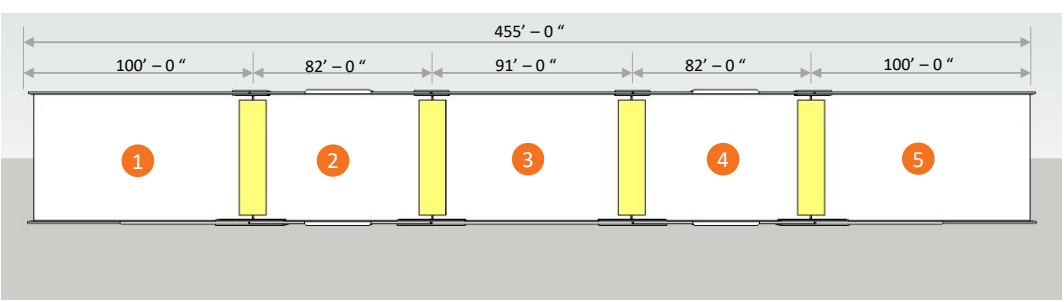

Tip – Field sections should take into consideration common fabrication weight and length capabilities along with shipping and construction limitations. Reference AASHTO/NSBA Steel Bridge Collaboration "G12.1 Guidelines to Design for Constructability".

25

Bolted Field Splice – Case Study Bridge

Four Bolted Field Splices

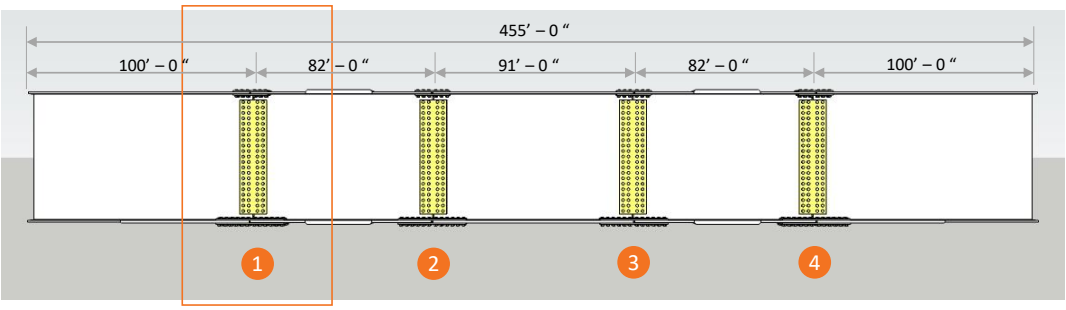

Tip – Marking field splices as "optional" gives fabricators the discretion of fabricating and shipping less pieces to the field.

26

Basics of Bolted Field Splice Design

Case Study Bridge – Flange Bolt Design

Smarter. Stronger. Steel.

27

Bolted Field Splice

Case Study Bridge (Flanges)

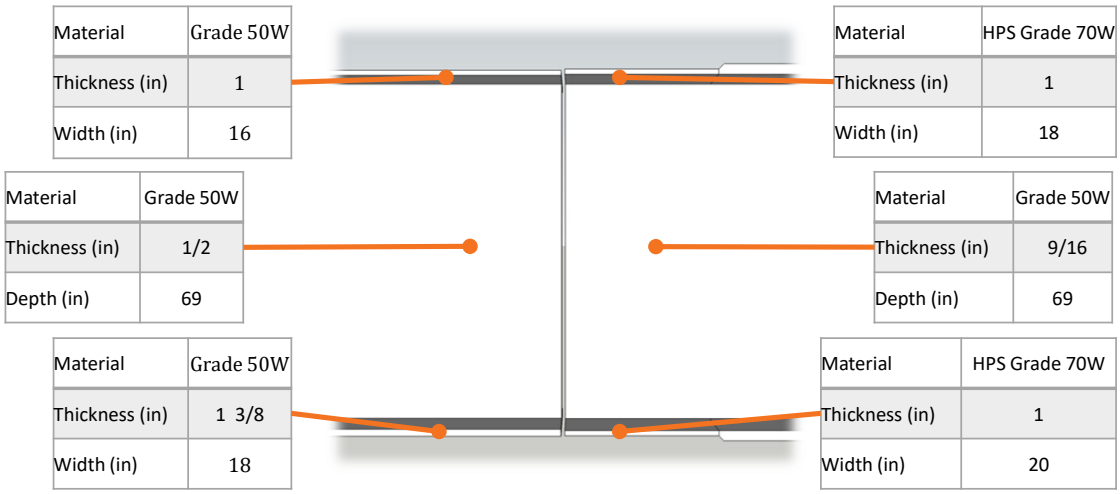

28

Bolted Field Splice – Flange Splice Design

Unfactored Design Moments

Load Case	Moment (kip-ft)
Non-composite Dead Load (DC_1)	248.00
Superimposed Composite Dead Load (DC_2)	50.00
Future Wearing Surface (DW)	52.00
Positive Live Load plus Impact ($LL^+ + I$)	2,469.00
Negative Live Load plus Impact ($LL^- + I$)	-1,754.00
Deck Casting	1,300.00

29

Bolted Field Splice – Flange Splice Design

Factored Moments

Load Case	Moment (kip-ft)
Deck Casting	1,820.00
Strength I - Positive	4,771.25
Strength I - Negative	-2,767.50
Service II - Positive	3,559.70
Service II - Negative	-1,930.20

30

Bolted Field Splice – Flange Splice Design

Bolts: F3125 Grade A325

Diameter (in)	7/8
Area (sq-in)	0.6013
P_t (kip)	39
Standard Hole Diameter (in)	15/16
Minimum Edge and End Distance (in)	1 1/8

31

Bolted Field Splice – Flange Splice Design

Splice Plates – Top Flange

	Inner	Outer
Splice Plate Material	Grade 50W	
Splice Plate Thickness (in)	11/16	5/8
Splice Plate Width (in)	7	16
Total A_{gross} (sq-in)	9.62	10.00
% Difference Ag Inner/Outer Area	3.82%	
Shear Planes per Bolt (N_s)	2	

Tip – Where the areas of the inside and outside flange splice plates do not differ by more than 10 percent, the connections may then be proportioned for the total flange design force assuming double shear.

32

Bolted Field Splice – Flange Splice Design

Flange Design Yield Resistance – Top Flange

Design Yield Resistance: $P_{fy} = F_{yf} A_e$ 6.13.6.1.3b-1

Effective Flange Area: $A_e = \left(\frac{\phi_u F_u}{\phi_y F_{yf}}\right) A_n \leq A_g$ 6.13.6.1.3b-2

$$A_e = \left(\frac{0.80(70.0)}{0.95(50.0)}\right)\left[16 - \boxed{4}\left({}^{15}/_{16}\right)\right](1.0) = 14.41\ in^2$$

$A_g = [16.0(1.0)] = 16.0\ in^2$ $\therefore A_e = 14.41\ in^2$

P_{fy} = 50.0(14.41) = 720.50 kips

Tip – Left side of the splice has the smaller design yield resistance (i.e., the top flange on the left side has a smaller area and lower yield strength).

33

Bolted Field Splice – Flange Splice Design

Number of Bolts Required (Strength) – Top Flange

Nominal Shear Resistance (Excluded): $R_n = 0.56 A_b F_{ub} N_S$ 6.13.2.7-1

Factored Shear Resistance: $R_r = \phi_s R_n$

Bolts Required: $N = {}^{P_{fy}}/_{R_r}$

$R_n = 0.56(0.6013)(120)(2) = 80.81$ kip

$R_r = 0.80(80.81) = 64.65\ kip$

$N = {}^{720.5}/_{64.65} = 11.14$

$\therefore\ Use\ 4\ Rows\ with\ 3\ Bolts\ Per\ Row\ Per\ Side$

34

Bolted Field Splice – Flange Splice Design

Splice Plates – Bottom Flange

	Inner	Outer
Splice Plate Material	Grade 50W	
Splice Plate Thickness (in)	7/8	3/4
Splice Plate Width (in)	8	18
Total A_{gross} (sq-in)	14.00	13.50
% Difference Ag Inner/Outer Area	3.64%	
Shear Planes per Bolt (N_s)	2	

Tip – The width of the outside splice plate should be at least as wide as the width of the narrowest flange at the splice.

35

Bolted Field Splice – Flange Splice Design

Flange Design Yield Resistance – Bottom Flange

Left Side

$$A_e = \left(\frac{0.80(70.0)}{0.95(50.0)}\right)\left[18 - 4\left({}^{15}/_{16}\right)\right](1.375) = 23.10\ in^2$$

$$A_g = [18.0(1.375)] = 24.75\ in^2 \qquad \therefore A_e = 23.10\ in^2$$

P_{fy} = 50.0(23.10) = 1,155.00 kips

Right Side

$$A_e = \left(\frac{0.80(85.0)}{0.95(70.0)}\right)\left[20 - 4\left({}^{15}/_{16}\right)\right](1.0) = 16.61\ in^2$$

$$A_g = [20.0(1.0)] = 20.00\ in^2 \qquad \therefore A_e = 16.61\ in^2$$

P_{fy} = 70.0(16.61) = 1,162.70 kips

Tip – Filler plates are typical where adjoining plates at the point of splice are different. A reduction factor is applied to the bolt shear resistance where filler is ¼ in or greater (6.13.6.1.4).

36

Bolted Field Splice – Flange Splice Design

Filler Plate Reduction – Bottom Flange

$$Filler\ Thickness = (69.0 + 1.0 + 1.375) - (69.0 + 1.0 + 1.0) = 0.375\ in$$

Filler Plate Reduction Factor: $R_f = \left[\frac{(1+\gamma)}{(1+2\gamma)}\right]$ 6.13.6.1.4-1

$$\gamma = {}^{A_f}/_{A_p} = {}^{18.0\ (0.375)}/_{(20.0(1.0))} = 0.338$$

$$R_f = \left[\frac{(1+0.338)}{(1+2(0.338))}\right] = 0.798$$

Tip – Adjacent girders are web centered, so the filler plate is the difference in height. If the girders were aligned differently, inner and outer filler plates may be necessary.

37

Bolted Field Splice – Flange Splice Design

Number of Bolts Required (Strength) – Bottom Flange

$$R_n = 0.56(0.6013)(120)(2) = 80.81 \text{ kip}$$

$$R_r = 0.80(80.81) = 64.65\ kip$$

$$R_f = 0.798$$

$$N = \frac{P_{fy}}{R_f(R_r)} = \frac{1155.00}{0.798(64.65)} = 22.39$$

$$\therefore\ Use\ 4\ Rows\ with\ 6\ Bolts\ Per\ Row\ Per\ Side$$

38

Bolted Field Splice – Flange Splice Design

Moment Resistance - Positive

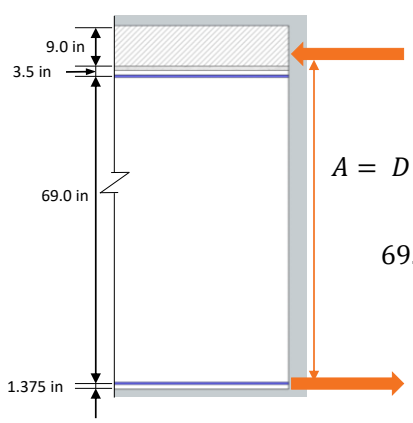

$$A = D + \frac{t_{ft}}{2} + t_{haunch} + \frac{t_s}{2}$$

$$69.00 + \frac{1.375}{2} + 3.5 + \frac{9.0}{2} = 77.69\ in$$

$$P_{fy}(bottom) = 1{,}155\ kips$$

$M_{flange} = P_{fy}$ (A/12) > |Strength I - Positive (kip-ft)|
1,155(77.69/12) = 7,477 kip-ft > |4,771 kip-ft|

39

Bolted Field Splice – Flange Splice Design

Moment Resistance - Negative

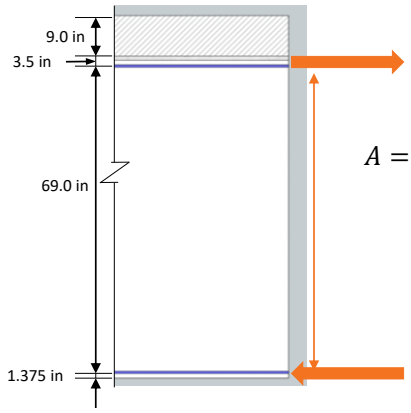

$$P_{fy}(top) = 720.50\ kips$$

$$A = D + \frac{t_{ft}}{2} + \frac{t_{fc}}{2}$$

$$69.00 + \frac{1.0}{2} + \frac{1.375}{2} = 70.19\ in$$

$$P_{fy}(bottom) = 1{,}155.00\ kips$$

$M_{flange} = P_{fy}$ (A/12) > |Strength I - Negative (kip-ft)|
720(70.19/12) = 4,211 kip-ft > |-2,767 kip feet|

40

Bolted Field Splice – Flange Splice Design

Summary

Flange	Bolt Rows (Per Side)	Total Bolts (Per Side)
Top	4	12
Bottom	4	24

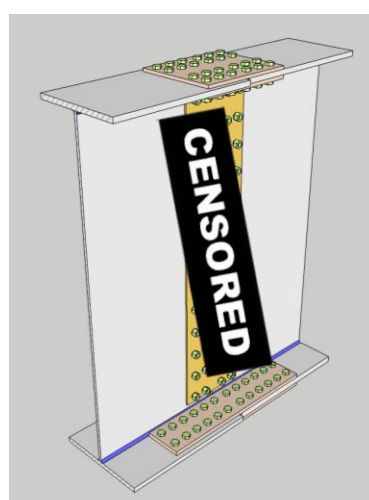

Additional Considerations

- Factored Yield Resistance - Tension
- Net Section to Gross Section Check - Tension
- Net Section Fracture Resistance - Tension
- Block Shear Rupture Resistance – Splice Plates
- Block Shear Rupture Resistance – Girder
- Bearing Resistance Check
- Slip Resistance
- Entering and Tightening Clearances

41

Basics of Bolted Field Splice Design

Case Study Bridge – Web Bolt Design

Smarter. Stronger. Steel.

42

Bolted Field Splice

Case Study Bridge (Web)

Material	Grade 50W
Thickness (in)	1
Width (in)	16

Material	HPS Grade 70W
Thickness (in)	1
Width (in)	18

Material	Grade 50W
Thickness (in)	1/2
Depth (in)	69

Material	Grade 50W
Thickness (in)	9/16
Depth (in)	69

Material	Grade 50W
Thickness (in)	1 3/8
Width (in)	18

Material	HPS Grade 70W
Thickness (in)	1
Width (in)	20

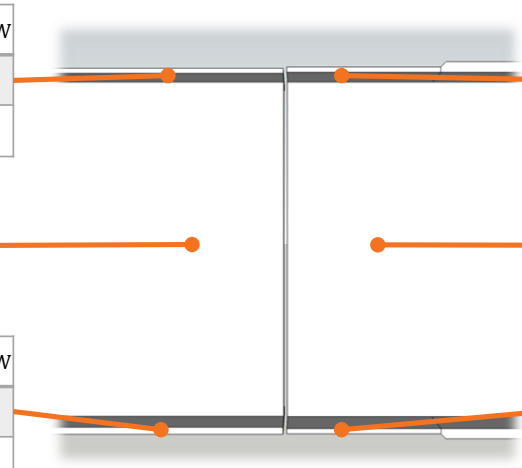

43

Bolted Field Splice – Web Splice Design

Unfactored Design Shears

Load Case	Shear (kip)
Non-composite Dead Load (DC_1)	-82.00
Superimposed Composite Dead Load (DC_2)	-12.00
Future Wearing Surface (DW)	-11.00
Positive Live Load plus Impact ($LL^+ + I$)	19.00
Negative Live Load plus Impact ($LL^- + I$)	-112.00
Deck Casting	-82.00

44

Bolted Field Splice – Web Splice Design

Factored Shears

Load Case	Shear (kip)
Deck Casting	-114.80
Service II - Positive	-80.30
Service II - Negative	-250.60

45

Bolted Field Splice – Web Splice Design

Bolts: F3125 Grade A325

Diameter (in)	7/8
Area (sq-in)	0.6013
P_t (kip)	39
Standard Hole Diameter (in)	15/16
Minimum Edge and End Distance (in)	1 1/8

46

Bolted Field Splice – Web Splice Design

Number of Bolts Required (Strength)

Factored Shear Resistance:

$$V_r = \phi_v V_n$$

Web Depth: 69 in
Left Web Thickness: 1/2 in
A_{gross} = 34.50 sq-in
E = 29,000 ksi
F_y = 50 ksi
Transverse-stiffener spacing: 17' – 3"

$$V_r = 1.0(468) = \boxed{468\ kips}$$

0.00

$$R = \sqrt{(V_r)^2 + (H_w)^2} = 468\ kips$$

47

Design Procedure - Web Splice Design

Number of Bolts Required (Strength)

Nominal Shear Resistance (Included): $R_n = 0.45 A_b F_{ub} N_S$ 6.13.2.7-1

Factored Shear Resistance: $R_r = \phi_s R_n$

Bolts Required: $N = {}^{V_r}/_{R_r}$

Are we done?

$R_n = 0.45(0.6013)(120)(2) = 64.94$ kip

$R_r = 0.80(64.94) = 51.95\ kip$

$$N = \frac{V_r}{R_r} = \frac{468}{51.95} = 9.00$$

$\therefore\ Use\ 2\ Rows\ with\ 5\ Bolts\ Per\ Row\ Per\ Side$

48

Bolted Field Splice – Web Splice Design

Number of Bolts Required (Seal)

$s \leq 4.0 + 4t \leq 7.00\ in$ 6.13.2.6.2

$$t_{splice} \geq \left(\frac{t_w}{2}\right) + \frac{1}{16} = \frac{1}{2}\left[\frac{1}{2}\right] + \frac{1}{16} = \frac{5}{16}\ in$$

$$s_{max} \leq 4.0 + 4\left[\frac{5}{16}\right] = 5.25\ in$$

$$N_{min} = 1 + \left[\frac{69 - 2(3)}{5.25}\right] = 13\ (per\ row)$$

$\therefore\ Use\ 2\ Rows\ with\ 13\ Bolts\ Per\ Row\ Per\ Side$

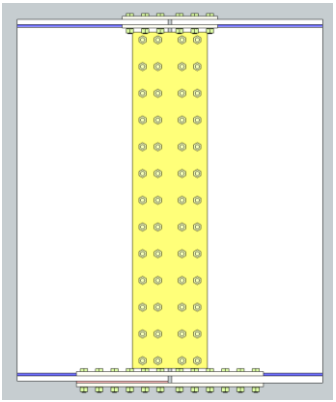

Web Splice - Final

50

Bolted Field Splice – Web Splice Design

- Summary

Bolt Rows (Per Side)	Total Bolts (Per Side)
2	26

- Additional Considerations
  - Factored Shear Yielding Resistance
  - Factored Shear Rupture Resistance
  - Block Shear Rupture Resistance - Splice Plates
  - Bearing Resistance
  - Slip Resistance
  - Entering and Tightening Clearances

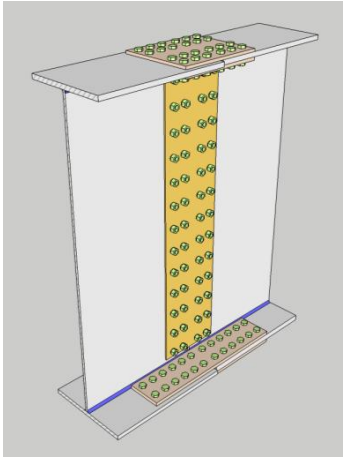

Splice - Final

51

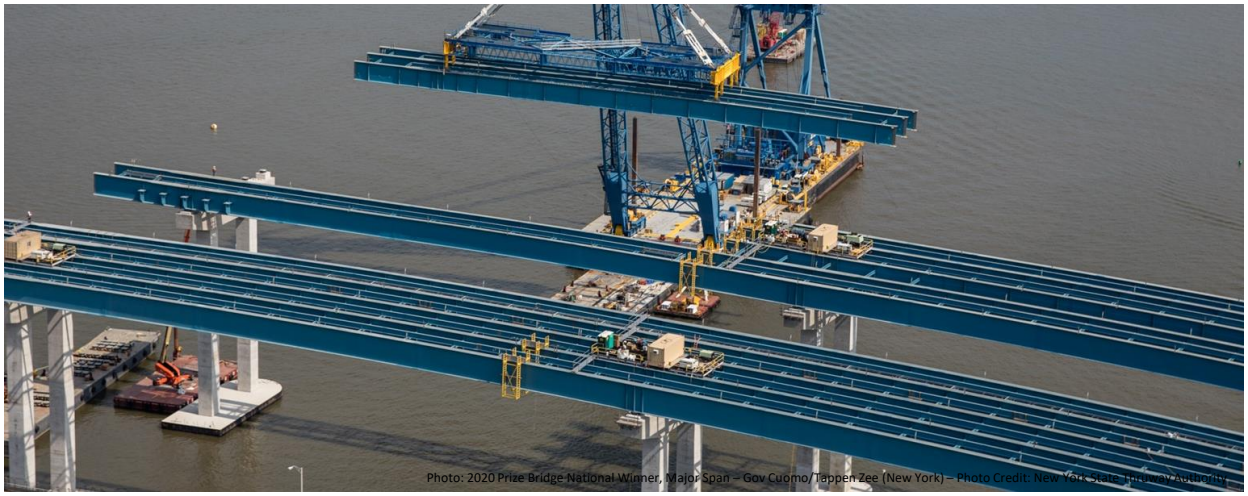

Basics of Bolted Field Splice Design

Designer Resources for Bolted Splices

Smarter. Stronger. Steel.

52

Designer Resources – Excel Spreadsheet

NSBA Bolted Splice Designer - Plate Girder NOTICE: DO NOT MODIFY THIS SHEET

Web Calculations

Load Combinations - Factored Shear

	Shear (kip)						
Load Combination	Noncomposite Dead Load (DC1)	Superimposed Composite Dead Load (DC2)	Future Wearing Surface (DW)	Positive Live Load plus Impact (LL+ + I)	Negative Live Load plus Impact (LL- + I)	Deck Casting	Factored Shear (kip)
Deck Casting	-82.00	-12.00	-11.00	19.00	-112.00	-82.00	-114.80
Service II - Positive	0.00	0.00	0.00	0.00	0.00	1.40	-80.30
Service II - Negative	1.00	1.00	1.00	1.30	0.00	0.00	-250.60
	1.00	1.00	1.00	0.00	1.30	0.00	

Bolt Factored Shear Resistance

Location	Bolt Type	Bolt Area (sq-in)	K_h	ϕ_s	F_u (ksi)	P_t (kip)	R_r - Single Shear (kip)	R
Web	A325 - Included	0.6013	Standard	0.80	120	39.00	25.98	

Bolt Nominal Slip Resistance

Faying Surface Class (K_s)	Hole Size Factor (K_h)	P_t (kip)	Slip Capacity - Double (kip)
0.50	1.00	39.00	39.00

Flange Design Results

Flange Moment Resistance Check Results

	H_w (kip)	Controlling
Positive	DNA	
Negative	DNA	

EULA | Input | Figures | Design Result Summary | Design Check Summary | Flange Splice Design | Web Splice Design

53

Designer Resources – Excel Spreadsheet

New Feature - Results Override

Miscellaneous Properties

Splice Plate Hole Method	Drilled - Full Size
Transverse Stiffener Spacing (d_o) (ft)	17.2500
Alignment Mode	Web Center

Bolt Count Overrides

	Count Override Status	Bolt Count - Calculated	Bolt Count - User Specified	Valid Override
Top Flange Bolt Count Override	User Specified	12	12	OK
Web Bolt Count Override	Spreadsheet Calculated	26		DNA
Bottom Flange Bolt Count Override	Spreadsheet Calculated	24		DNA

54

Designer Resources – Design Guide

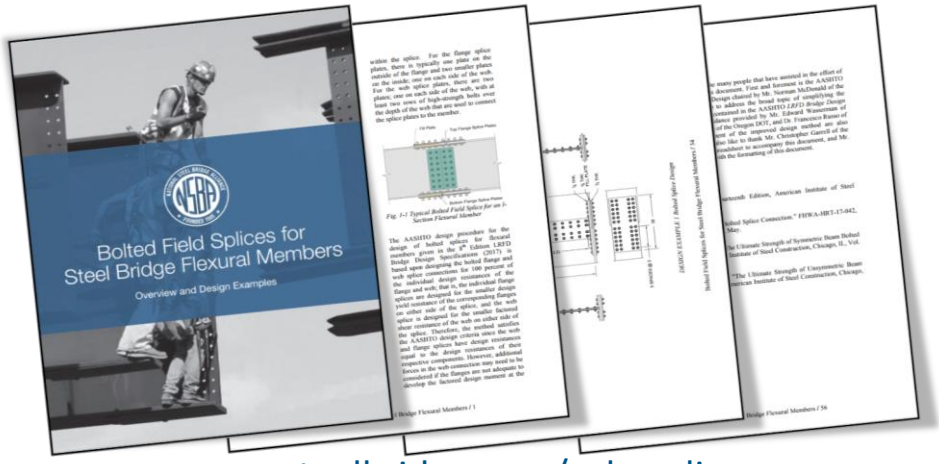

www.steelbridges.org/nsbasplice

55

56

Updates to the AASHTO Design Specification

LRFD BDS Section 6
9th Edition (2020)

Michael A. Grubb, P.E.
M.A. Grubb & Associates, LLC
Wexford, PA

M.A. Grubb & Associates, LLC

Significant Updates Appearing in the 9th Edition LRFD BDS

- Revisions to the L/85 Guideline
- Improvements to the Web Load-shedding Factor, R_b, for Longitudinally Stiffened Girders
- Revisions to the Fatigue Detail Table 6.6.1.2.3-1
- Revisions to the Flexural Design Provisions for Tees & Double Angles
- Revisions to the Design Provisions for Variable Web Depth Members
- New Design Provisions for Noncomposite Box-Section Members

Revisions to the L/85 Guideline

- Description of Specification Revisions:
  - Moves the L/85 guideline from Article C6.10.3.4.1 (Deck Placement) to Article C6.10.2.2 (Girder Flange Proportioning).
  - Guideline intended to ensure that individual field sections are more stable and easier to handle during lifting, erection, and shipping.
  - Guideline should be used in conjunction with the flange proportioning limits in Article 6.10.2.2 to establish a minimum top-flange width for each unspliced girder field section.
  - Terms in the guideline will be redefined as follows (Eq. C6.10.2.2-1):

$$b_{tfs} \geq \frac{L_{fs}}{85}$$

  - The guideline is only to be applied to individual unspliced girder field sections for design.

Improvements to R_b for Longitudinally Stiffened Girders

- Description of Specification Revisions:
  - Improvements to the web load-shedding factor, R_b, for longitudinally stiffened steel girders.
  - Based on research by Lakshmi Subramanian and Don White at Georgia Tech – supported by AISI, AASHTO, FHWA, GDOT, and the MBMA.

Improvements to R_b for Longitudinally Stiffened Girders

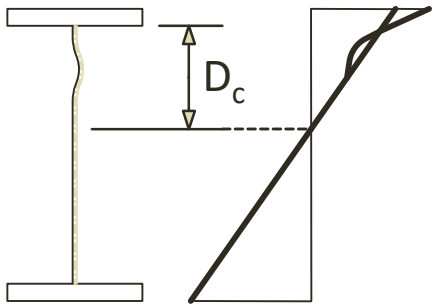

- Maximum major-axis bending resistance:
  - Compression flange $F_{nc} = R_b R_h F_{yc}$
- R_b = 1 when
  - Section is composite in positive flexure, and $D/t_w \leq 150$
  - One or more longitudinal stiffeners are provided, and:

$$\frac{D}{t_w} \leq 0.95\sqrt{\frac{Ek}{F_{yc}}}$$

  - $2D_c/t_w \leq \lambda_{rw}$, where $\lambda_{rw} = 5.7\sqrt{E/F_{yc}}$ (i.e., web is nonslender)

- Otherwise: $$R_b = 1.0 - \frac{a_{wc}}{1200 + 300a_{wc}}\left(\frac{2D_c}{t_w} - \lambda_{rw}\right) \leq 1.0$$

Improvements to R_b for Longitudinally Stiffened Girders

- … when the web satisfies $2D_c / t_w \le \lambda_{rw}$, $R_b = 1.0$
- Otherwise: in lieu of a strain-compatibility analysis considering the web effective widths, for longitudinally-stiffened sections in which one or more continuous longitudinal stiffeners are provided that satisfy $d_s / D_c < 0.76$:

$$R_b = 1.07 - 0.12\frac{D_c}{D} - \frac{a_{wc}}{1200 + 300a_{wc}}\left[\frac{D}{t_w} - \lambda_{rwD}\right] \le 1.0$$

- For all other cases:

$$a_{wc} = \frac{2D_c t_w}{b_{fc} t_{fc}}$$

$$R_b = 1.0 - \frac{a_{wc}}{1200 + 300a_{wc}}\left(\frac{2D_c}{t_w} - \lambda_{rw}\right) \le 1.0$$

Revisions to the Fatigue Detail Table 6.6.1.2.3-1

1.6 Base metal at the net section of manholes or hand holes made to the requirements of AASHTO/AWS D1.5, in which the width of the hole is at least 0.30 times the width of the plate (A ≥ 0.30W) (Bonachera Martin and Connor, 2017). The geometry of the hole shall be: a. circular; or b. square with corners filleted at a radius at least 0.10 times the width of the plate (R ≥ 0.10W); or c. oval (B > A), elongated parallel to the primary stress range; or	C	44 x 10^8	10	In the net section originating at the side of the hole	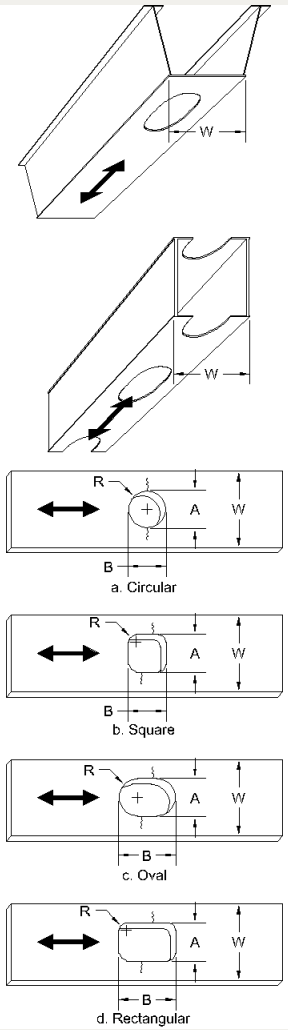

Revisions to the Fatigue Detail Table 6.6.1.2.3-1

d. rectangular (*B* > *A*), elongated parallel to the primary stress range, with corners filleted at a radius at least 0.10 times the width of the plate (*R* ≥ 0.10*W*). All holes shall be centered on the plate under consideration, and all stresses shall be computed on the net section. (Note: Condition 1.5 shall apply for all holes in cross-sections in which other smaller open holes or holes with nonpretensioned fasteners are located anywhere within the net section of the larger hole, and minimum edge distance requirements specified in Article 6.13.2.6.6 are satisfied for the smaller holes.)	C	44×10^8	10	In the net section originating at the side of the hole	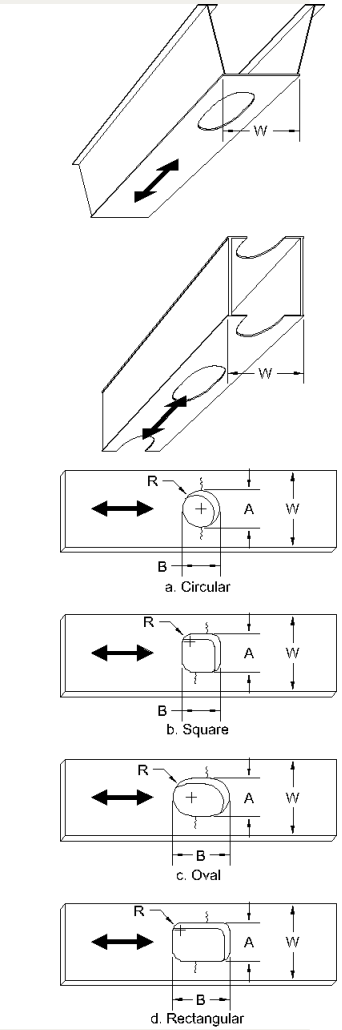

Revisions to the Flexural Design Provisions for Tees & Double Angles

Description of Specification Revisions:

- Revisions are made to Articles 6.12.2.2.4 and C6.12.2.2.4 for determining the flexural resistance of tees and double angles loaded in the plane of symmetry in order to bring the provisions up-to-date with the latest provisions in AISC (2016).
  - Prior editions of the AISC Specification did not distinguish between tees and double angles and as a result, there were instances when double angles would appear to have less strength than two single angles. This concern is now addressed by providing separate provisions for tees and double angles.
  - In those cases where double angles should have the same strength as two single angles, the revised provisions make use of the equations for single angles, as applicable, given in Section F10 of AISC (2016).

Revisions to the Flexural Design Provisions for Tees & Double Angles

- In addition, a new linear transition equation from M_p to M_y is introduced for the limit state of lateral-torsional buckling when the stem of the member is in tension; that is, when the flange is subject to compression. Previous specifications transitioned abruptly from the full plastic moment to the elastic buckling range.

For ~~lateral-torsional buckling~~ tee stems and double angle web legs subject to tension, the nominal flexural resistance based on lateral-torsional buckling shall be taken as:

- If $L_b \leq L_p$, then lateral-torsional buckling shall not apply.
- If $L_p < L_b \leq L_r$, then:

$$M_n = M_p - \left(M_p - M_y\right)\left(\frac{L_b - L_p}{L_r - L_p}\right) \qquad (6.12.2.2.4c\text{-}1)$$

- If $L_b > L_r$, then:

$$M_n = M_{cr} \qquad (6.12.2.2.4c\text{-}2)$$

Revisions to the Design Provisions for Variable Web Depth Members

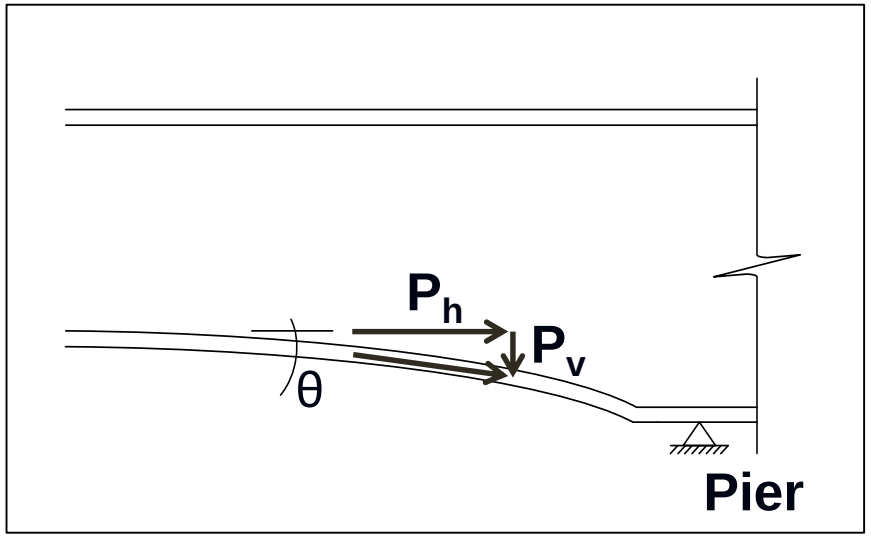

Horizontal component of force in flange:

$$P_h = M\frac{A_f}{S_x}$$

Normal stress in inclined flange:

$$f_n = \frac{P_h}{A_f \cos\theta}$$

Vertical component of force in flange:

$$P_v = P_h \tan\theta$$

Revisions to the Design Provisions for Variable Web Depth Members

- A provision in Article 6.10.1.4 on Variable Web Depth Members has been revised as follows:

6.10.1.4—Variable Web Depth Members

At points where the bottom flange becomes horizontal, ~~the transfer of the vertical component of the flange force back into the web shall be considered.~~ full- or partial-depth transverse stiffening of the web shall be provided, unless the provisions of Article D6.5.2 are satisfied for the factored vertical component of the inclined flange force using a length of bearing *N* equal to zero.

Revisions to the Design Provisions for Variable Web Depth Members

D6.5.2—Web Local Yielding

Webs subject to compressive or tensile concentrated loads shall satisfy:

$$R_u \leq \phi_b R_n \qquad \text{(D6.5.2-1)}$$

in which:

R_n = nominal resistance to the concentrated loading (kip)

- For interior-pier reactions and for concentrated loads applied at a distance from the end of the member that is greater than d:

$$R_n = (5k + N) F_{yw} t_w \qquad \text{(D6.5.2-2)}$$

- Otherwise:

$$R_n = (2.5k + N) F_{yw} t_w \qquad \text{(D6.5.2-3)}$$

where:

ϕ_b = resistance factor for bearing specified in Article 6.5.4.2
d = depth of the steel section (in.)
k = distance from the outer face of the flange resisting the concentrated load or bearing reaction to the web toe of the fillet (in.)
N = length of bearing (in.). N shall be greater than or equal to k at end bearing locations.
R_u = factored concentrated load or bearing reaction (kip)

Revisions to the Design Provisions for Variable Web Depth Members

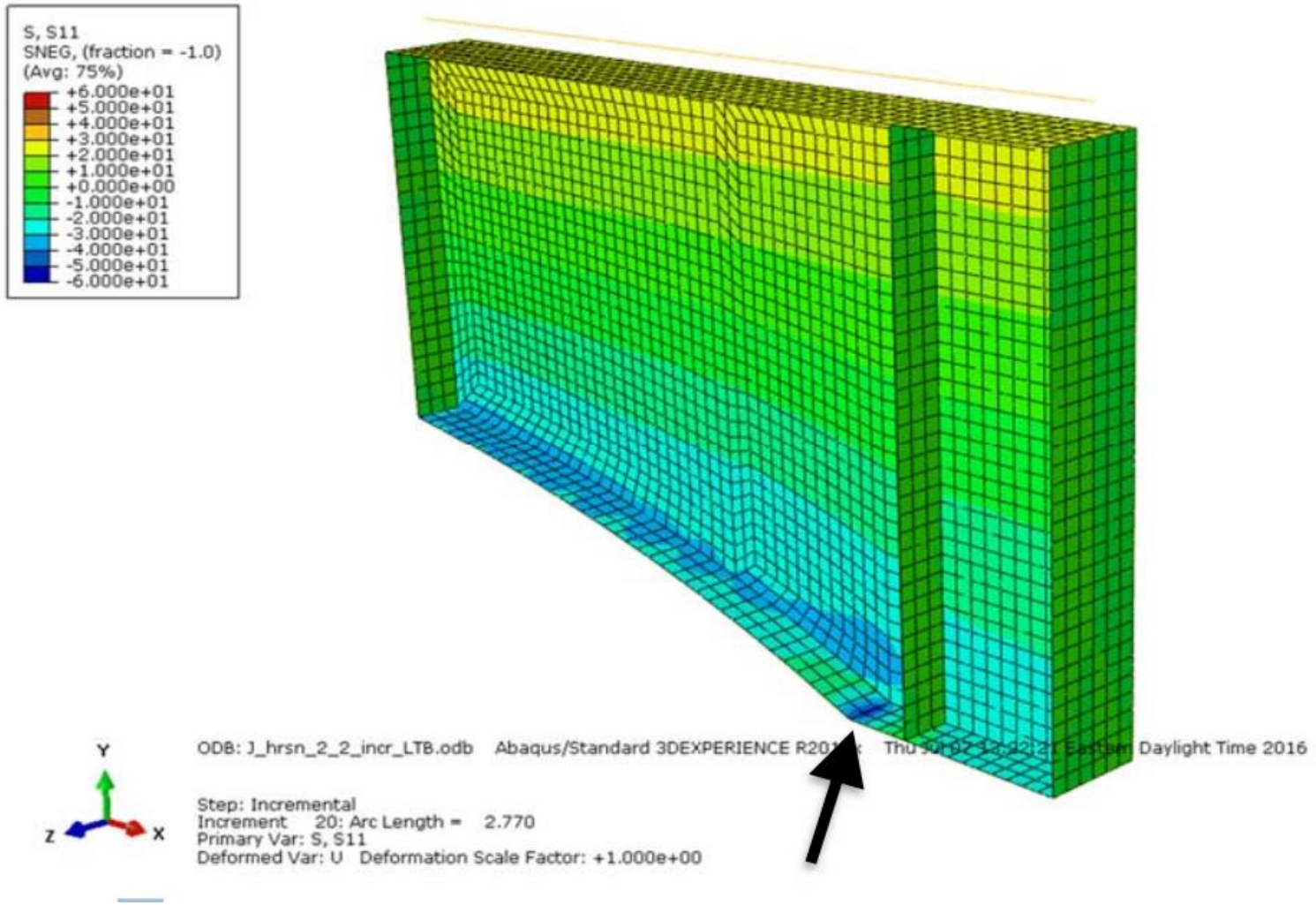

New Design Provisions for Noncomposite Box-Section Members

- Description of Specification Revisions:
  - Implementation of a more general and consistent approach for the LRFD design of unstiffened and stiffened compression elements in all noncomposite box sections (i.e., box sections utilized in trusses, arches, frames, straddle beams, etc.) subject to uniform stress (compression) or nonuniform stress (e.g. compression plus bending or compression plus bending plus shear and/or torsion, etc.)

  - Based on research conducted under FHWA IDIQ Task Order 5011 managed by HDR Engineering
  - Project Team:
    - Don White, Georgia Tech (Technical PI)
    - Ajinkya Lokhande, Georgia Tech
    - John Yadlosky, HDR Engineering
    - Charles King, COWI
    - Mike Grubb, M.A. Grubb & Associates
    - Tony Ream, HDR Engineering
    - Frank Russo, Michael Baker International, LLC

New Design Provisions for Noncomposite Box-Section Members

- Benefits:
  - Unstiffened and longitudinally stiffened noncomposite *rectangular* box-section members
  - Built-up welded boxes, bolted boxes, and square and rectangular HSS
  - Singly- and doubly-symmetric rectangular sections
  - Homogeneous and hybrid sections
  - All ranges of web and flange plate slenderness
  - Use of an effective compression flange width in determining cross-section properties for boxes with noncompact and slender compression flanges (rely on post-buckling resistance)
  - No theoretical shear buckling or plate local buckling permitted at the fatigue and service limit states, and for constructibility
  - Use of a web plastification factor for sections having noncompact or compact webs (allows flexural resistances > M_{ye})

New Design Provisions for Noncomposite Box-Section Members

- Benefits (cont.):
  - No need to check elastic LTB; accuracy with respect to the limit state of inelastic LTB is significantly improved
  - More efficient b/t limits for solid web arches
  - Eliminates reliance on LFD Truss Guide Specifications
  - Handles interaction of all force effects, including torsion
  - Provides improved provisions for longitudinally stiffened flanges (new Appendix E6):
    - Provide same set of equations for any number of stiffeners, transversely stiffened or not
    - Take advantage of longitudinal stiffener, transverse stiffener and stiffened plate contributions to compression capacity
    - Allows designer to easily determine from equation components if longitudinally and/or transverse stiffening is effective
  - Obtain more accurate and sufficient ratings for existing structures outside the slenderness limits of the current Specifications, or with inadequate stiffeners

New Design Provisions for Noncomposite Box-Section Members

- Benefits (cont.):
  - Stiffened slender boxes have the potential to reduce weight for large structures, such as steel tower legs for cable stayed bridges
  - Specifications are more streamlined and user-friendly
  - Similar, but better prediction results relative to current AASHTO & AISC, where the current AISC & AASHTO are actually applicable … and similar, but better, predictions compared to Eurocode, BS5400 (pre Eurocode), and Wolchuk & Mayrbaurl (1980)

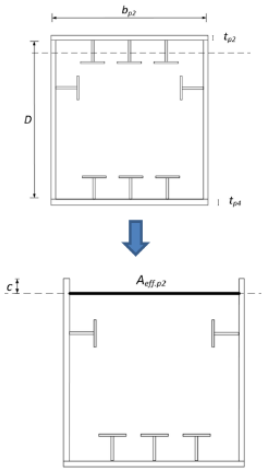

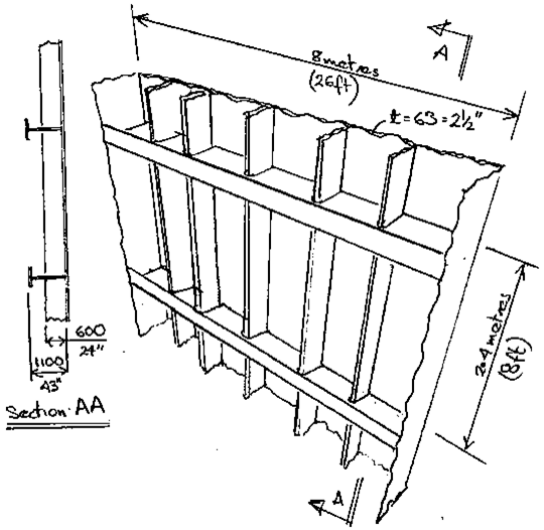

New Design Provisions for Noncomposite Box-Section Members

- **"Proposed LRFD Specifications for Noncomposite Steel Box-Section Members"**
  - FHWA-HIF-19-063 | July 2019
  - (NCHRP 20-07/415)
- **Expanded Commentary**
- **Additional provisions for specialized situations**
- **3 Examples:**
  - Longitudinally Unstiffened Truss End Post
  - Longitudinally Stiffened/Slender Tie Girder
  - Longitudinally Stiffener Arch Rib
- **2 Flowcharts coordinated with Examples**
  - Compression & Flexural Resistance

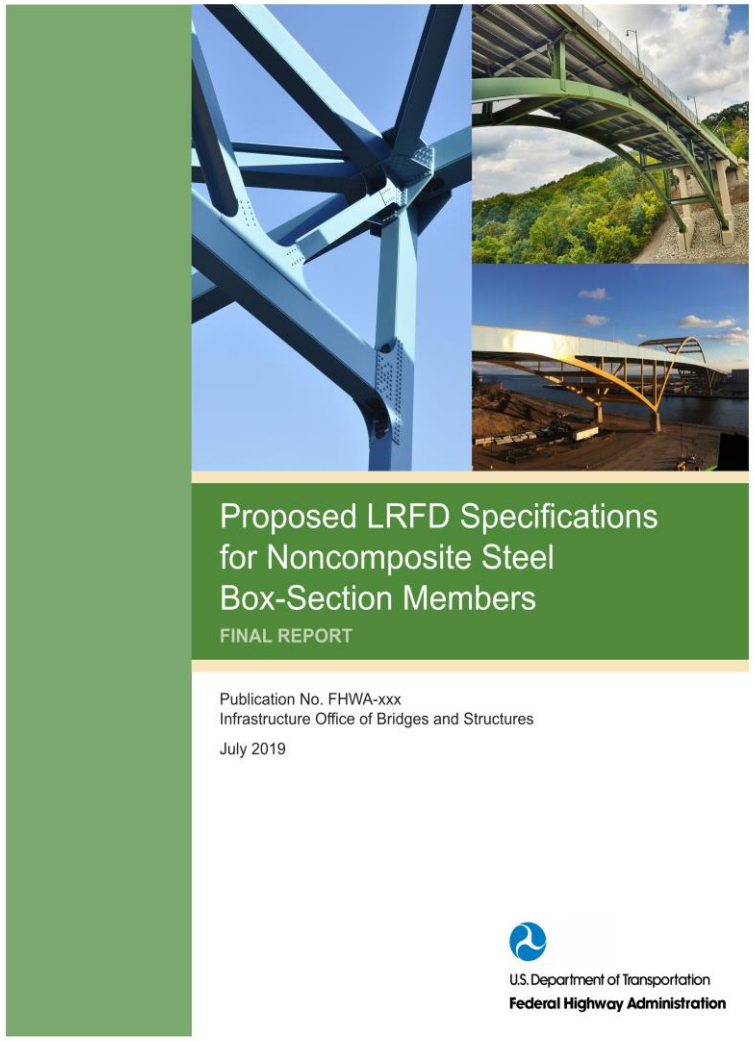

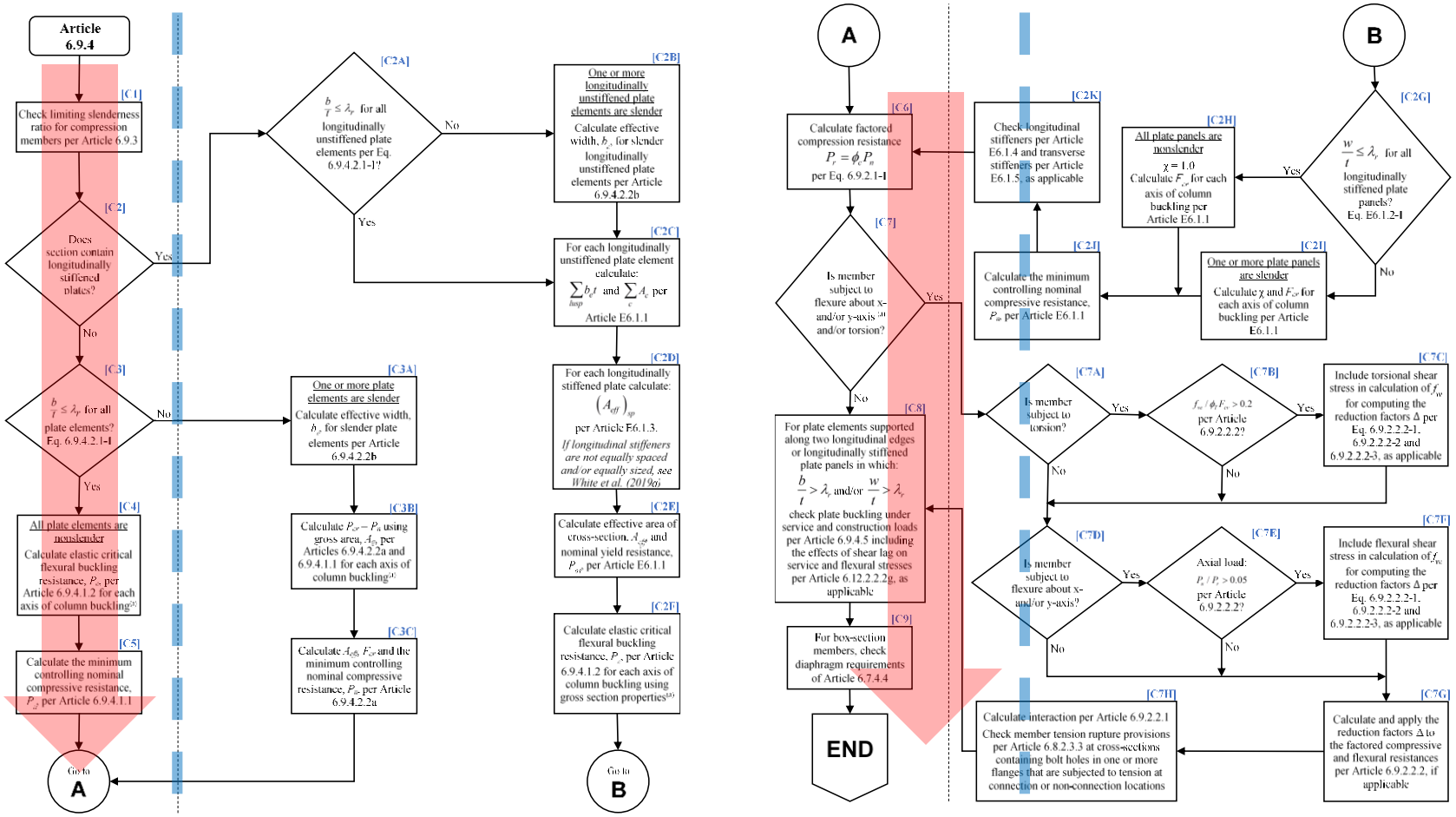
Article 6.9.4
[C1]
Check limiting slenderness ratio for compression members per Article 6.9.3
[C2]
Does section contain longitudinally stiffened plates?
Yes
No
[C2A]
$\frac{b}{T} \le \lambda_r$ for all longitudinally unstiffened plate elements per Eq. 6.9.4.2.1-1?
No
Yes
[C2B]
One or more longitudinally unstiffened plate elements are slender
Calculate effective width, b_e, for slender longitudinally unstiffened plate elements per Article 6.9.4.2.2b
[C2C]
For each longitudinally unstiffened plate element calculate:
$\sum_{hsp} b_e t$ and $\sum_e A_e$ per Article E6.1.1
[C2D]
For each longitudinally stiffened plate calculate:
$(A_{eff})_{sp}$
per Article E6.1.3.
If longitudinal stiffeners are not equally spaced and/or equally sized, see White et al. (2019a)
[C2E]
Calculate effective area of cross-section, $A_{c,sp}$, and nominal yield resistance, P_{ns}, per Article E6.1.1
[C2F]
Calculate elastic critical flexural buckling resistance, P_e, per Article 6.9.4.1.2 for each axis of column buckling using gross section properties[a)]
Go to B
[C3]
$\frac{b}{T} \le \lambda_r$ for all plate elements? Eq. 6.9.4.2.1-1
No
Yes
[C3A]
One or more plate elements are slender
Calculate effective width, b_e, for slender plate elements per Article 6.9.4.2.2b
[C3B]
Calculate $P_{cr} = P_n$ using gross area, A_g, per Articles 6.9.4.2.2a and 6.9.4.1.1 for each axis of column buckling[a)]
[C3C]
Calculate $A_{c,g}$, F_{cr} and the minimum controlling nominal compressive resistance, P_n, per Article 6.9.4.2.2a
[C4]
All plate elements are nonslender
Calculate elastic critical flexural buckling resistance, P_e, per Article 6.9.4.1.2 for each axis of column buckling[2)]
[C5]
Calculate the minimum controlling nominal compressive resistance, P_n, per Article 6.9.4.1.1
Go to A
A
[C6]
Calculate factored compression resistance
$P_r = \phi_c P_n$
per Eq. 6.9.2.1-1
[C7]
Is member subject to flexure about x- and/or y-axis [a)] and/or torsion?
Yes
No
[C8]
For plate elements supported along two longitudinal edges or longitudinally stiffened plate panels in which:
$\frac{b}{t} > \lambda_r$ and/or $\frac{w}{t} > \lambda_r$
check plate buckling under service and construction loads per Article 6.9.4.5 including the effects of shear lag on service and flexural stresses per Article 6.12.2.2.2g, as applicable
[C9]
For box-section members, check diaphragm requirements of Article 6.7.4.4
END
[C2K]
Check longitudinal stiffeners per Article E6.1.4 and transverse stiffeners per Article E6.1.5, as applicable
[C2J]
Calculate the minimum controlling nominal compressive resistance, P_n, per Article E6.1.1
[C2H]
All plate panels are nonslender
$\chi = 1.0$
Calculate F_{cr} for each axis of column buckling per Article E6.1.1
[C2I]
One or more plate panels are slender
Calculate χ and F_{cr} for each axis of column buckling per Article E6.1.1
B
[C2G]
$\frac{w}{t} \le \lambda_r$ for all longitudinally stiffened plate panels? Eq. E6.1.2-1
Yes
No
[C7A]
Is member subject to torsion?
Yes
No
[C7B]
$f_{vw} / \phi_v F_{vn} > 0.2$ per Article 6.9.2.2.2?
Yes
No
[C7C]
Include torsional shear stress in calculation of f_{vw} for computing the reduction factors Δ per Eq. 6.9.2.2.2-1, 6.9.2.2.2-2 and 6.9.2.2.2-3, as applicable
[C7D]
Is member subject to flexure about x- and/or y-axis?
Yes
No
[C7E]
Axial load: $P_u / P_r > 0.05$ per Article 6.9.2.2.2?
Yes
No
[C7F]
Include flexural shear stress in calculation of f_{vu} for computing the reduction factors Δ per Eq. 6.9.2.2.2-1, 6.9.2.2.2-2 and 6.9.2.2.2-3, as applicable
[C7G]
Calculate and apply the reduction factors Δ to the factored compressive and flexural resistances per Article 6.9.2.2.2, if applicable
[C7H]
Calculate interaction per Article 6.9.2.2.1
Check member tension rupture provisions per Article 6.8.2.3.3 at cross-sections containing bolt holes in one or more flanges that are subjected to tension at connection or non-connection locations

Questions?